LEGO Technic

8248

4115772

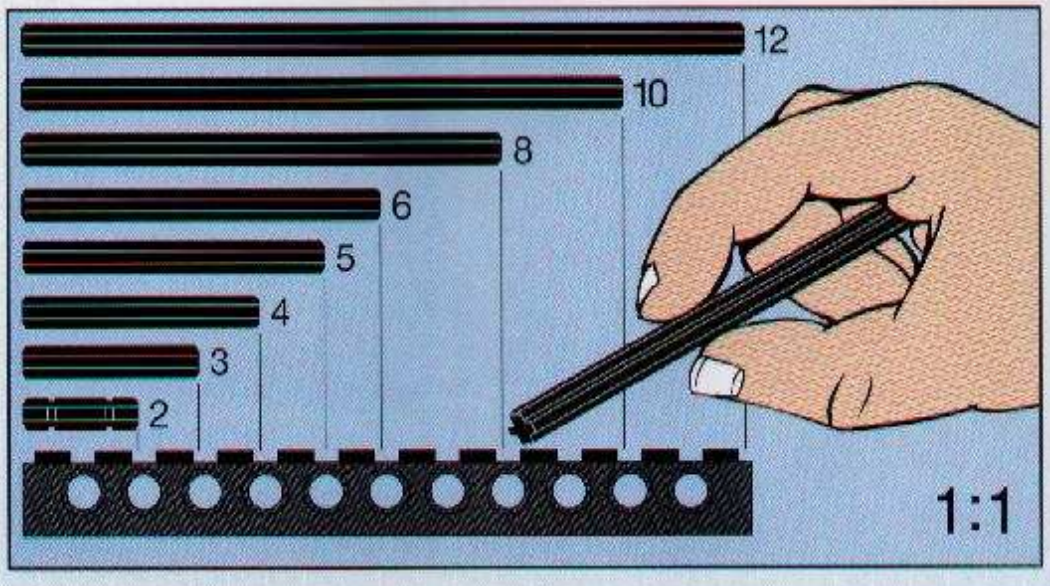
12
10
8
6
5
4
3
2
1:1

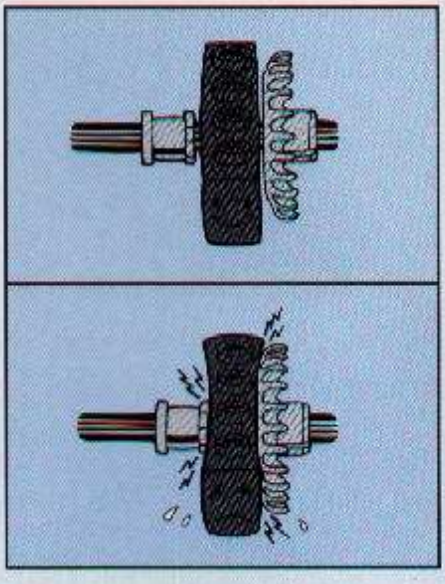

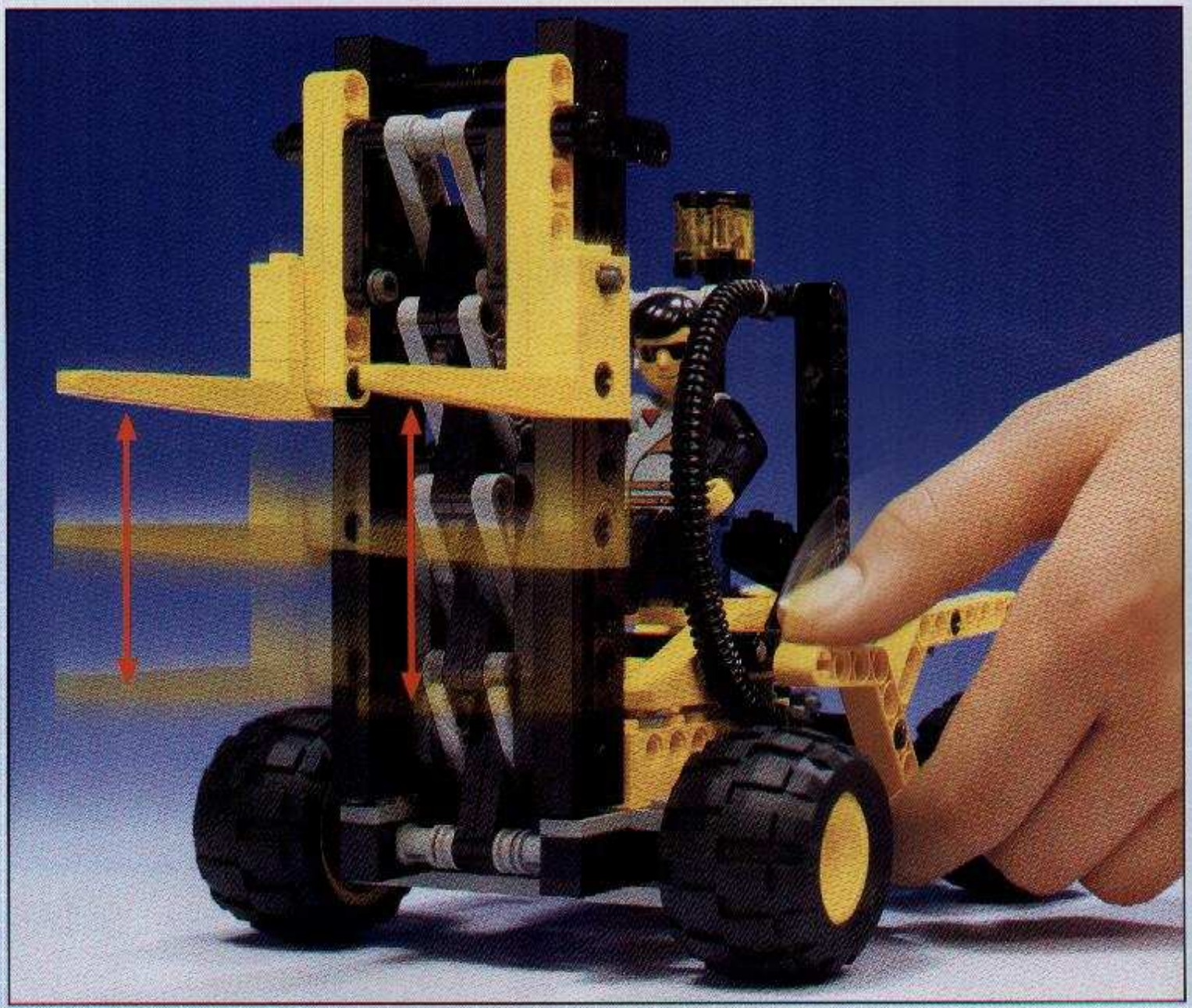

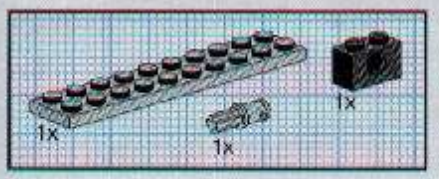

1

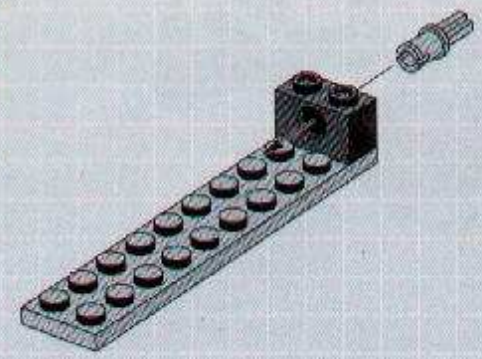

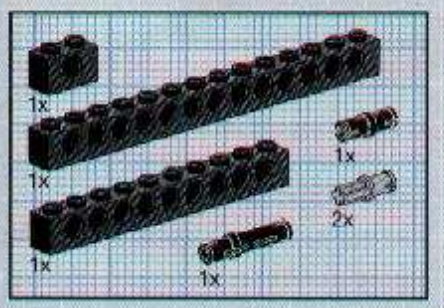

2

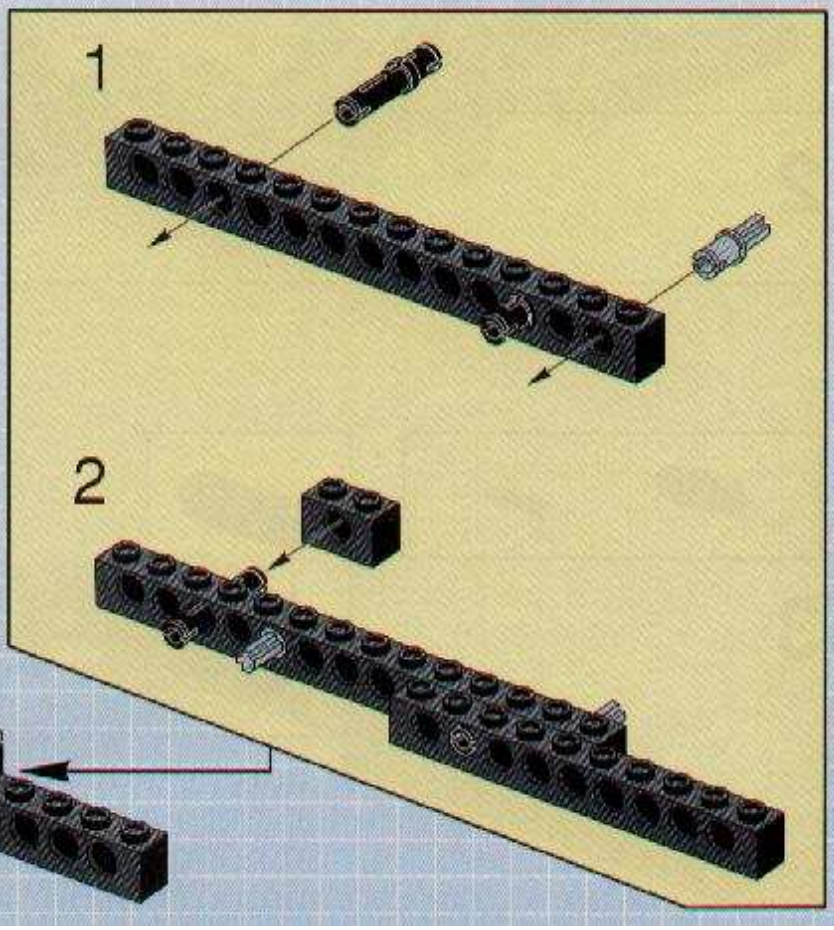

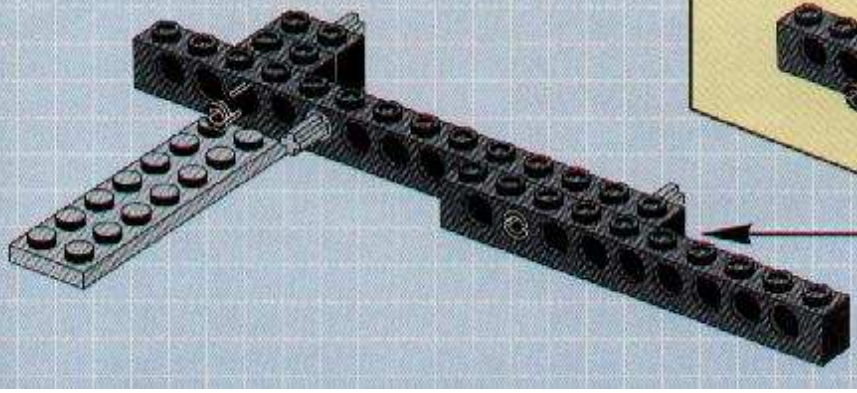

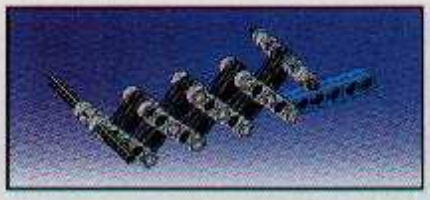

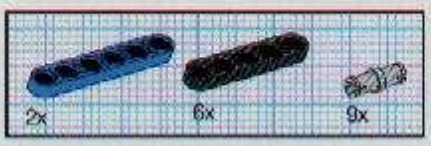

1

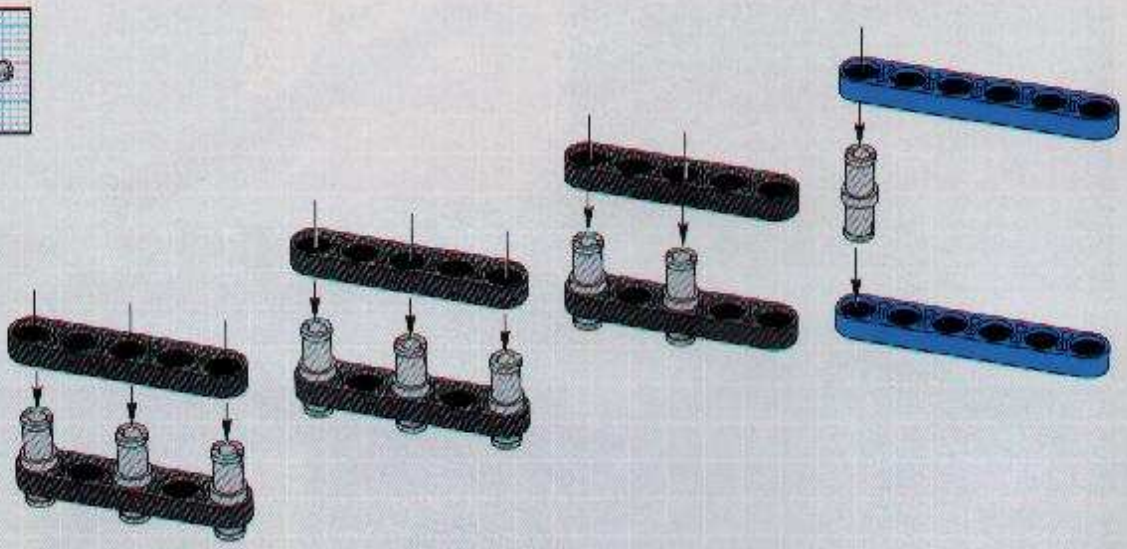

2

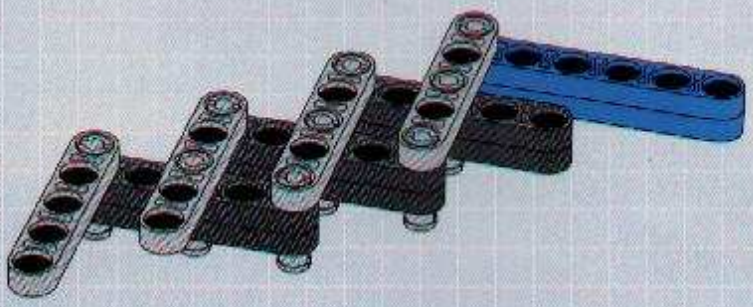

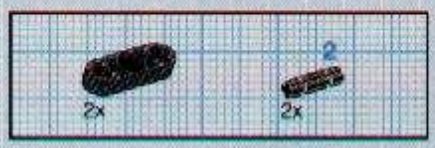

3

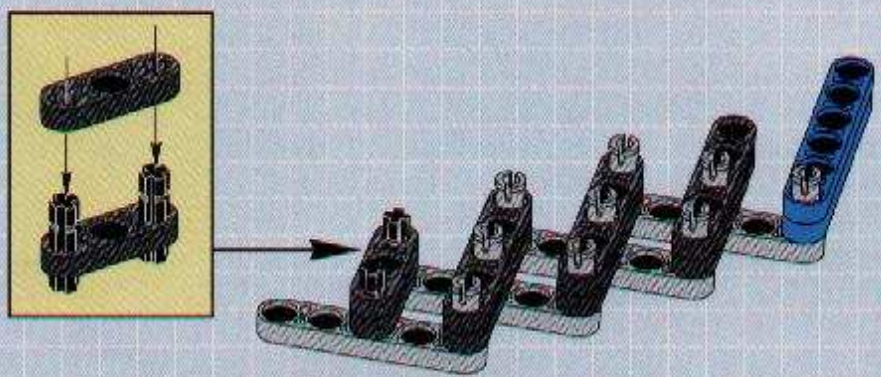

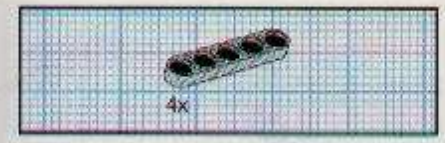

4

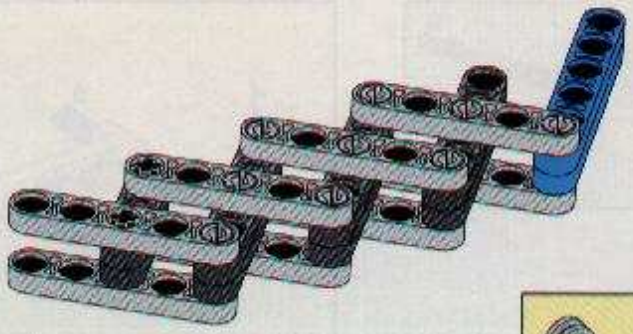

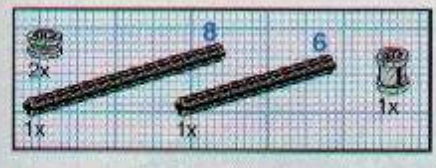

5

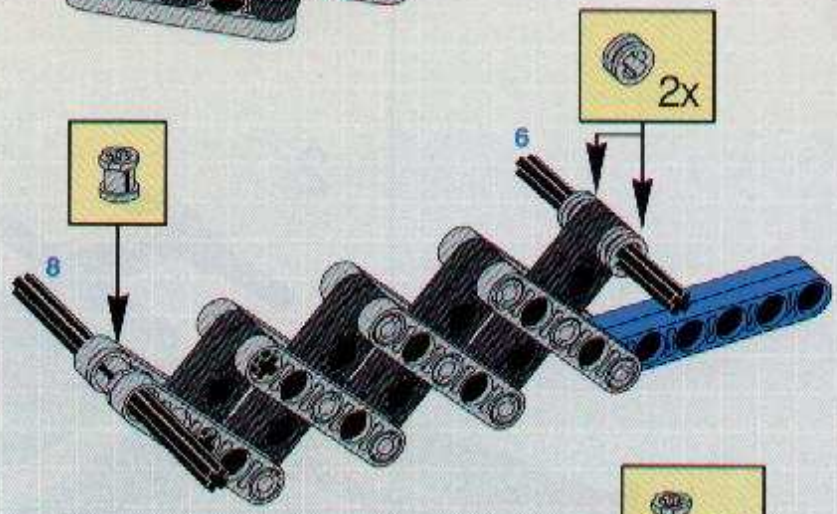

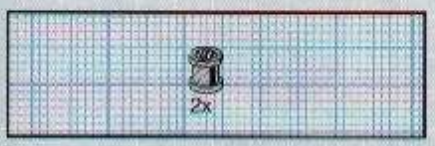

6

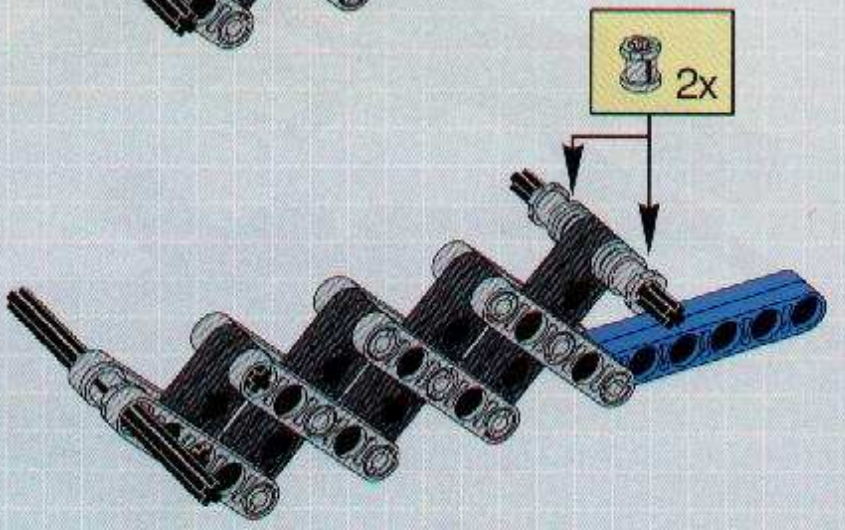

3

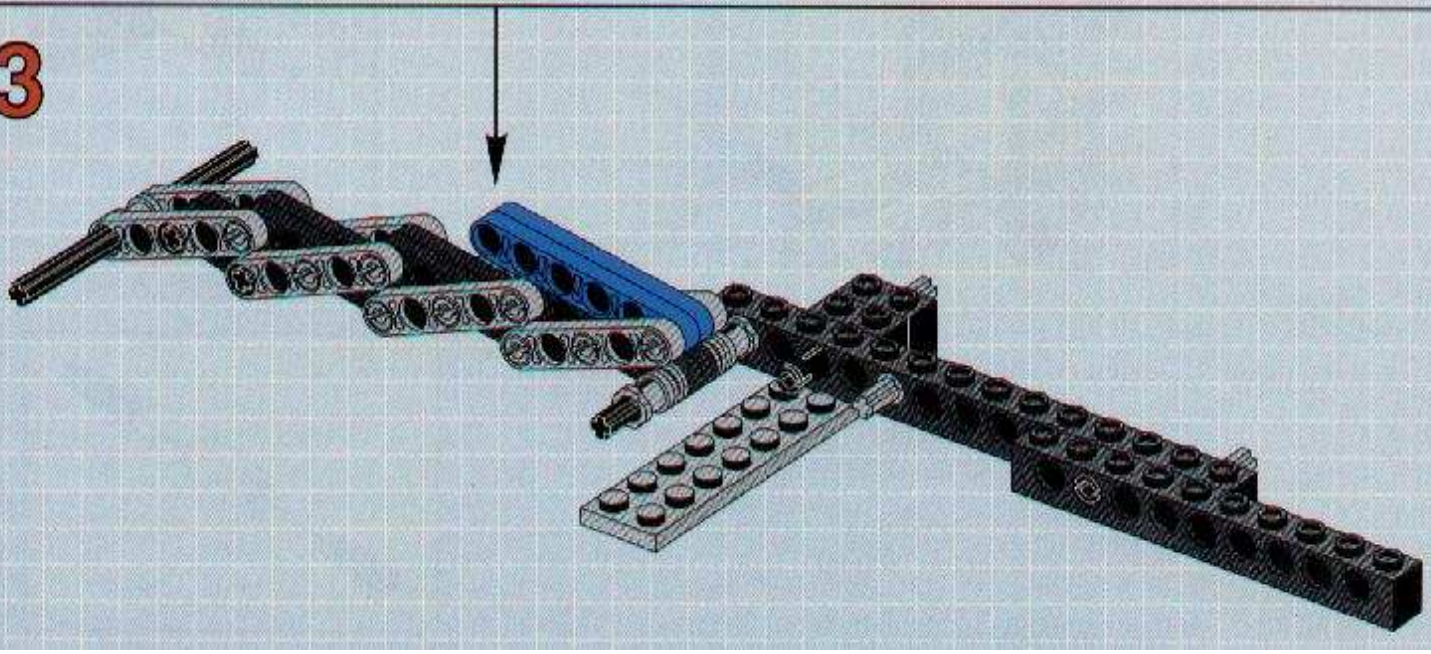

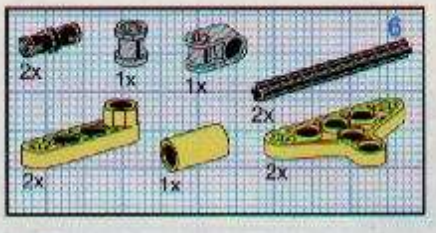

4

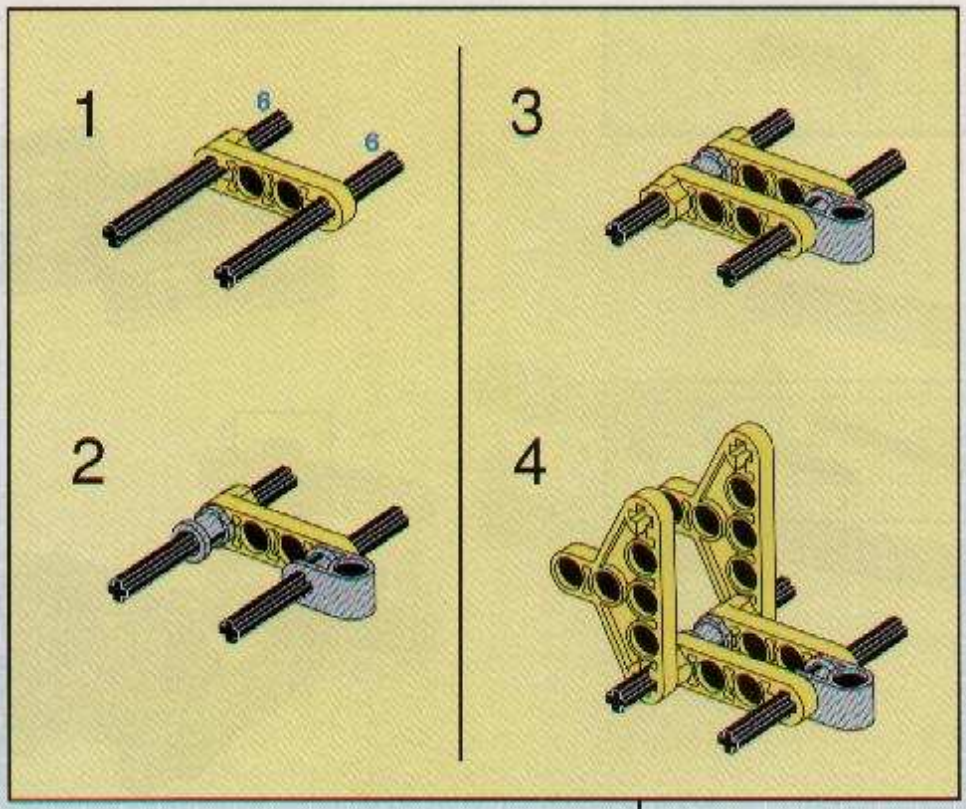

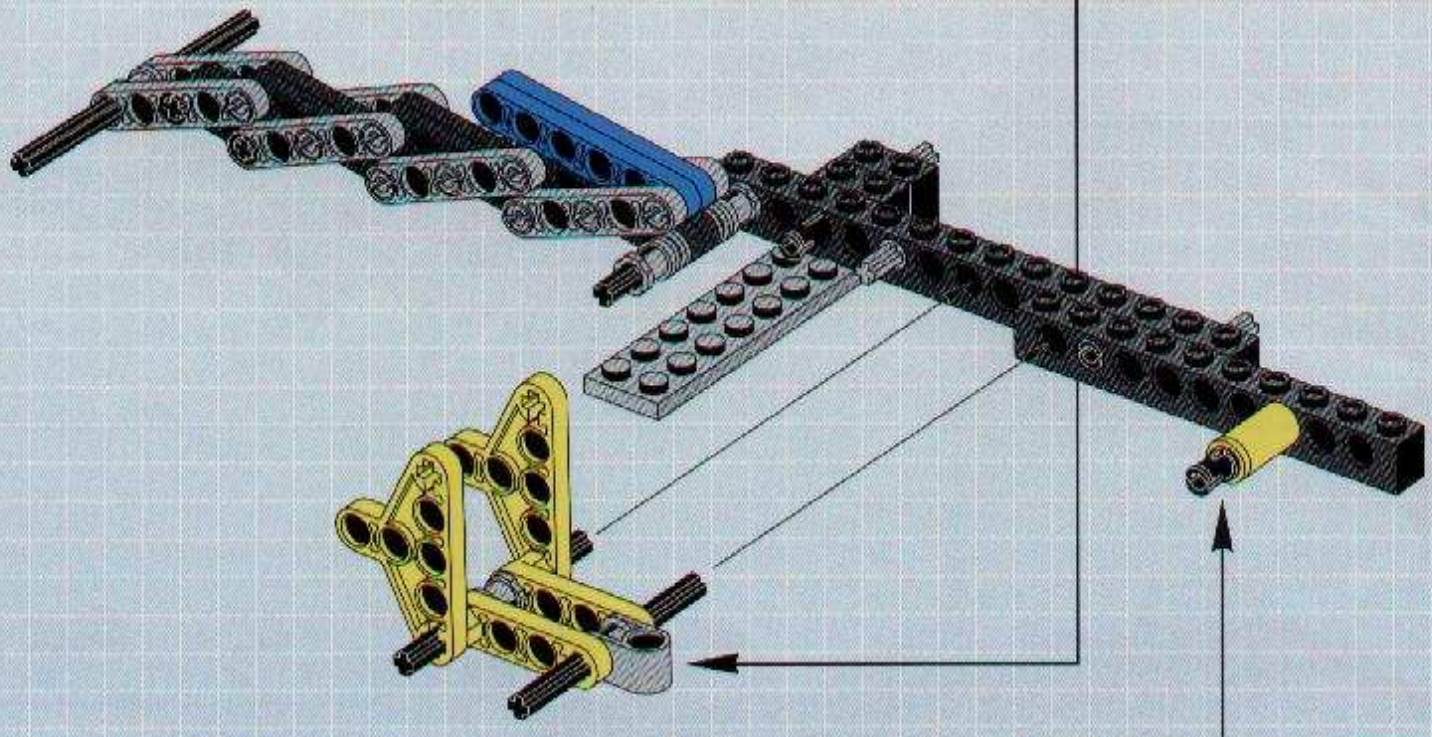

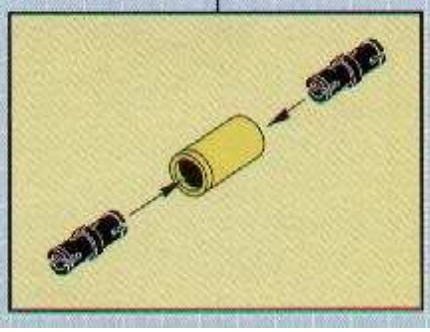

5

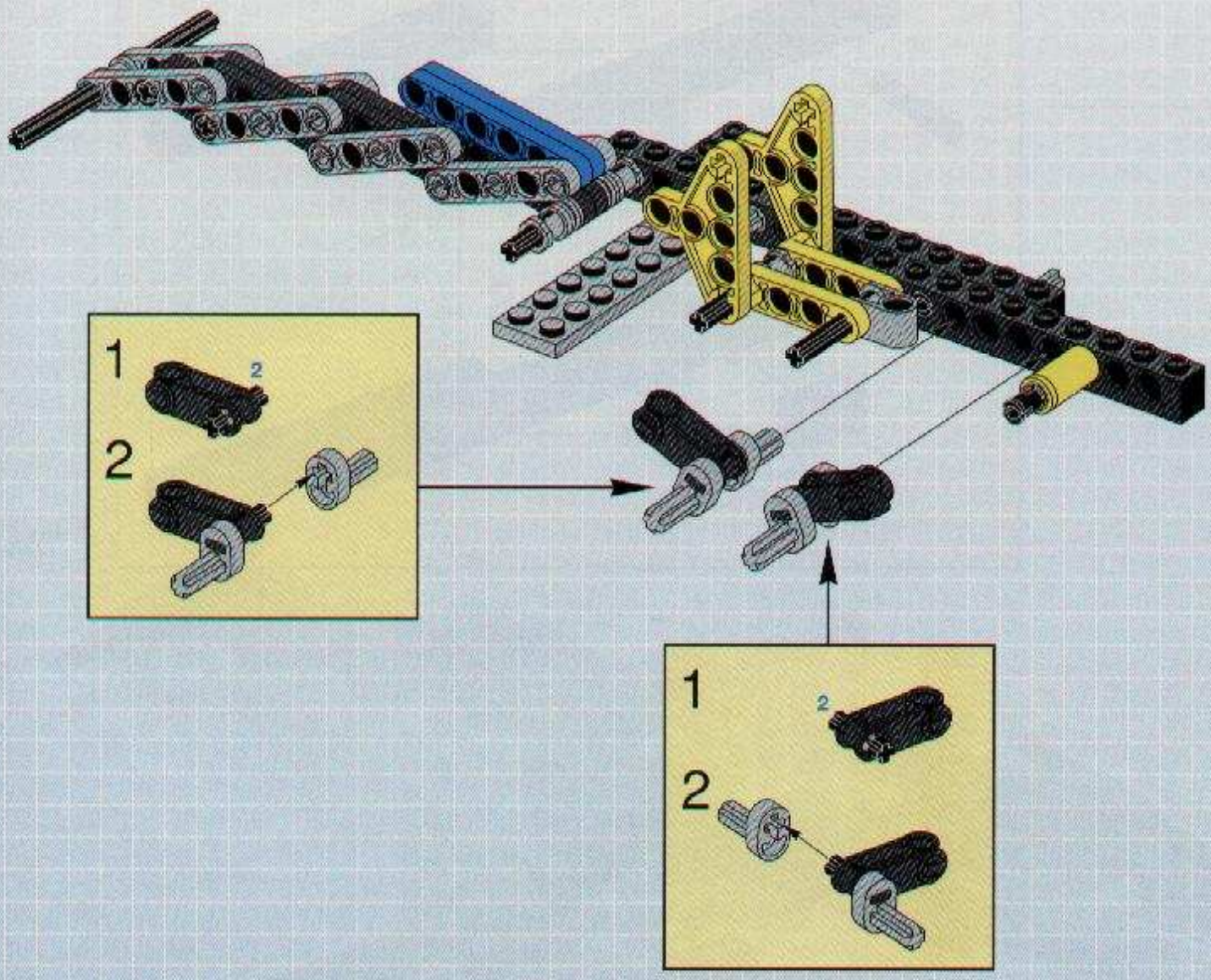

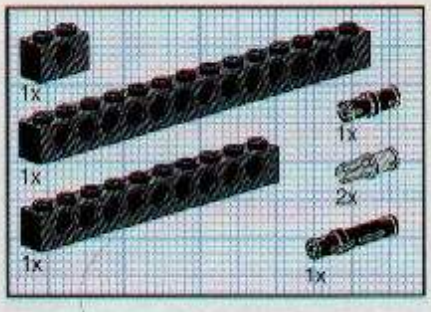

6

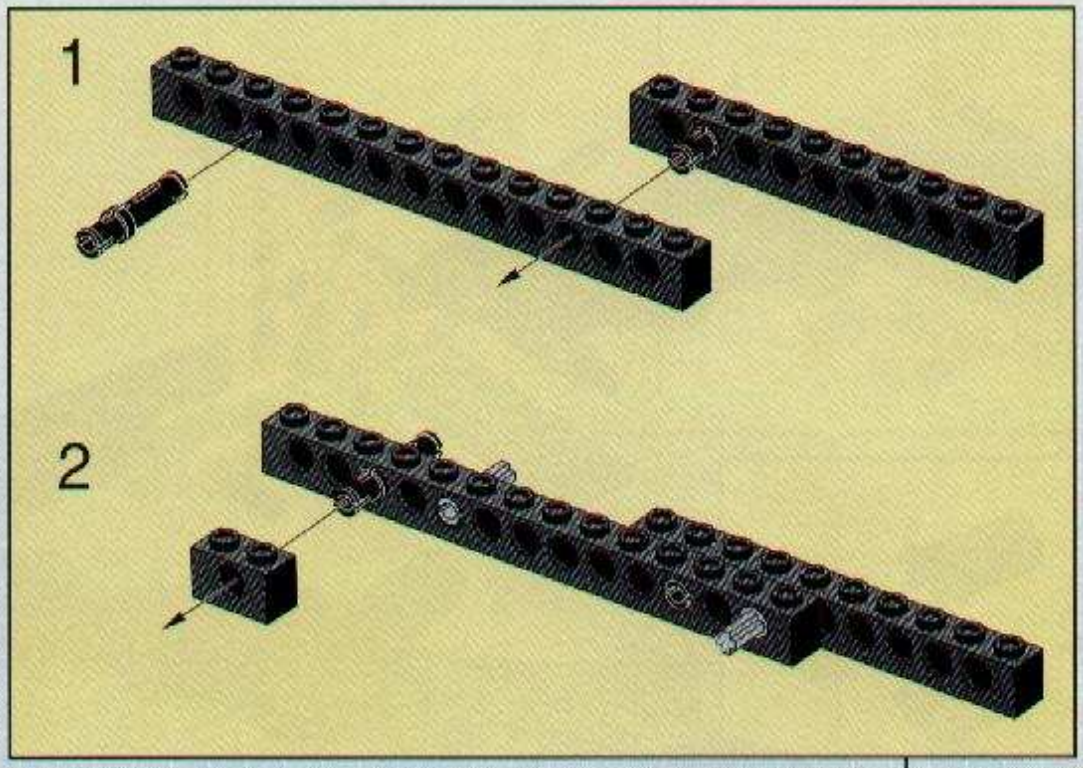

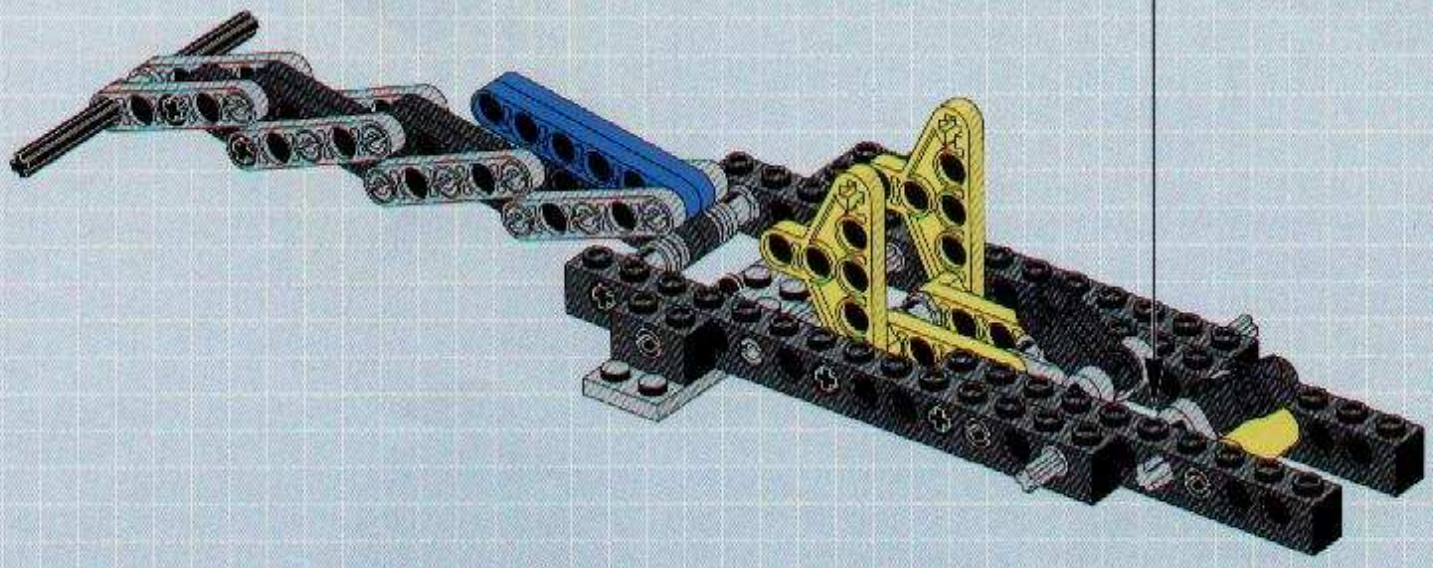

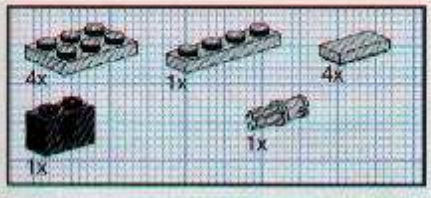

7

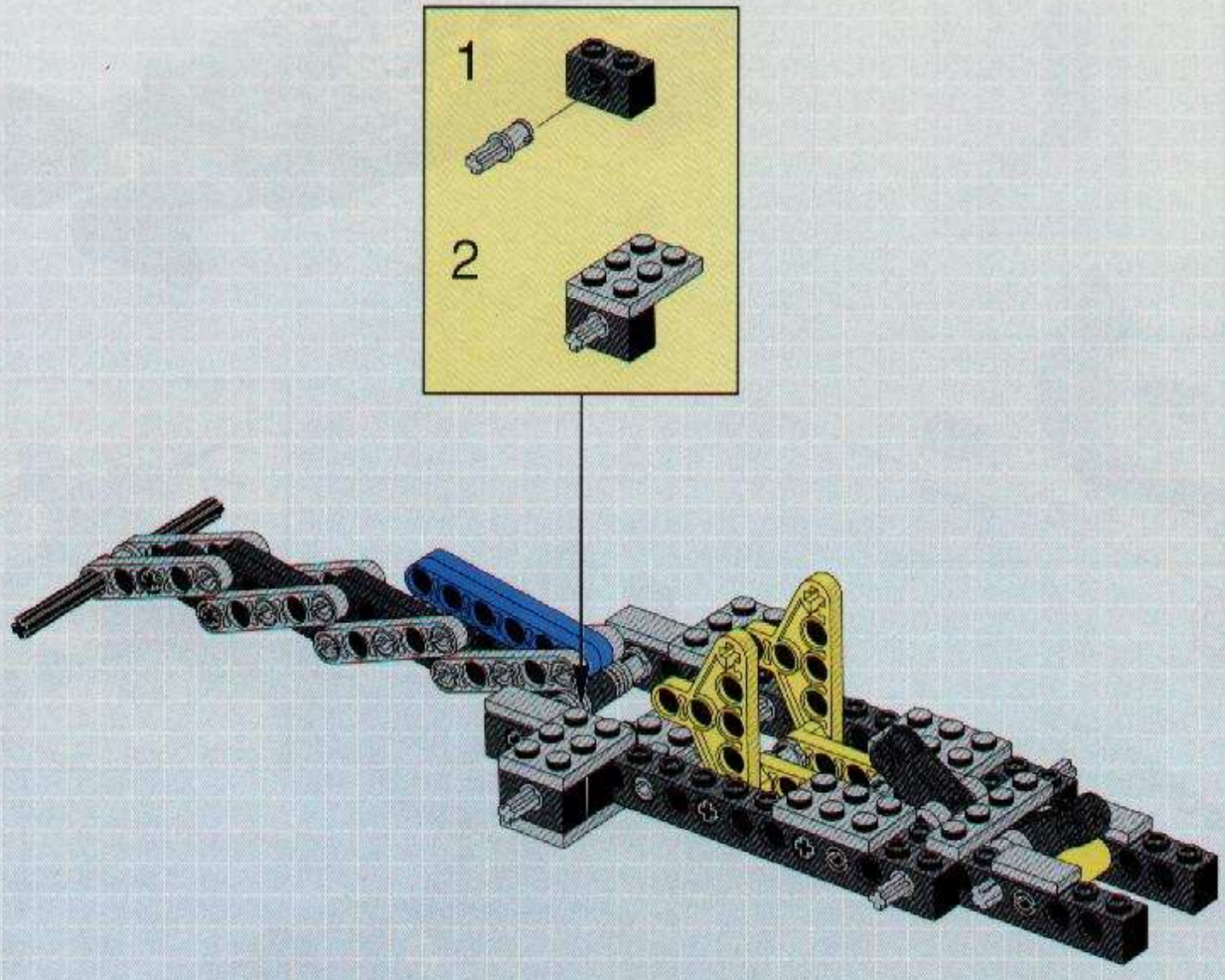

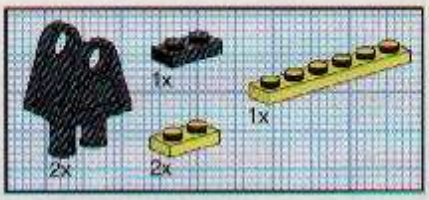

8

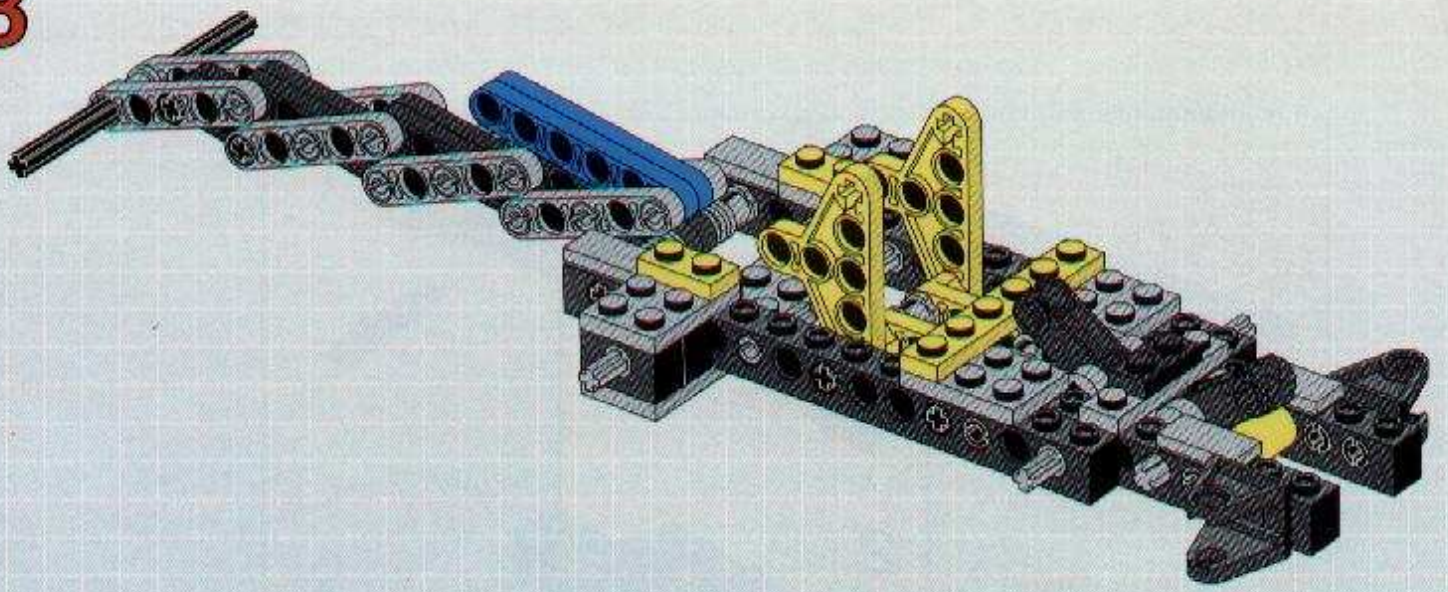

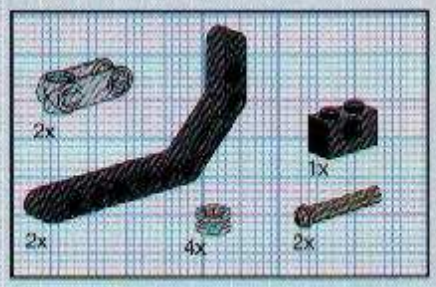

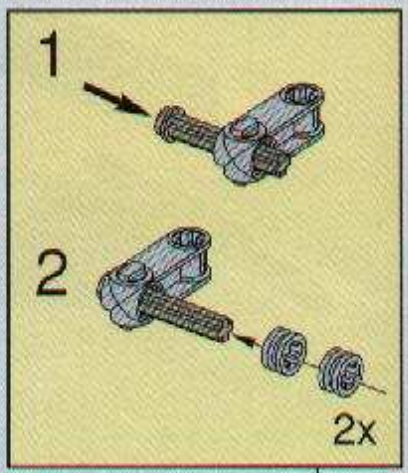

9

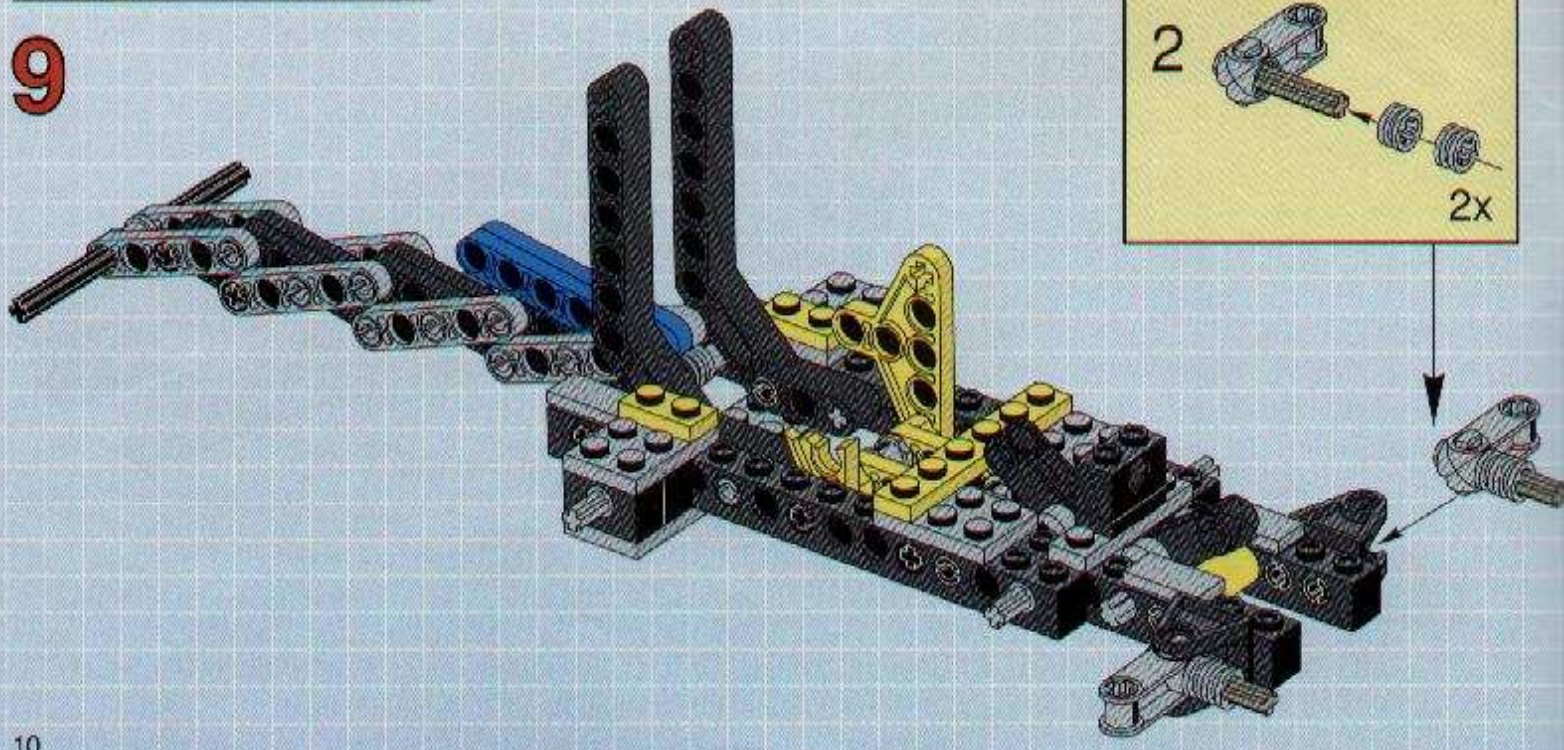

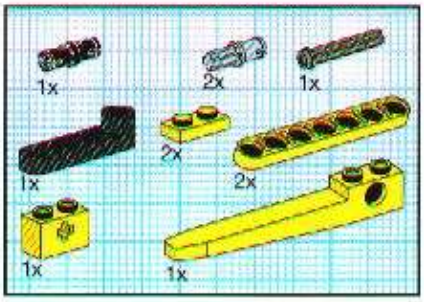

10

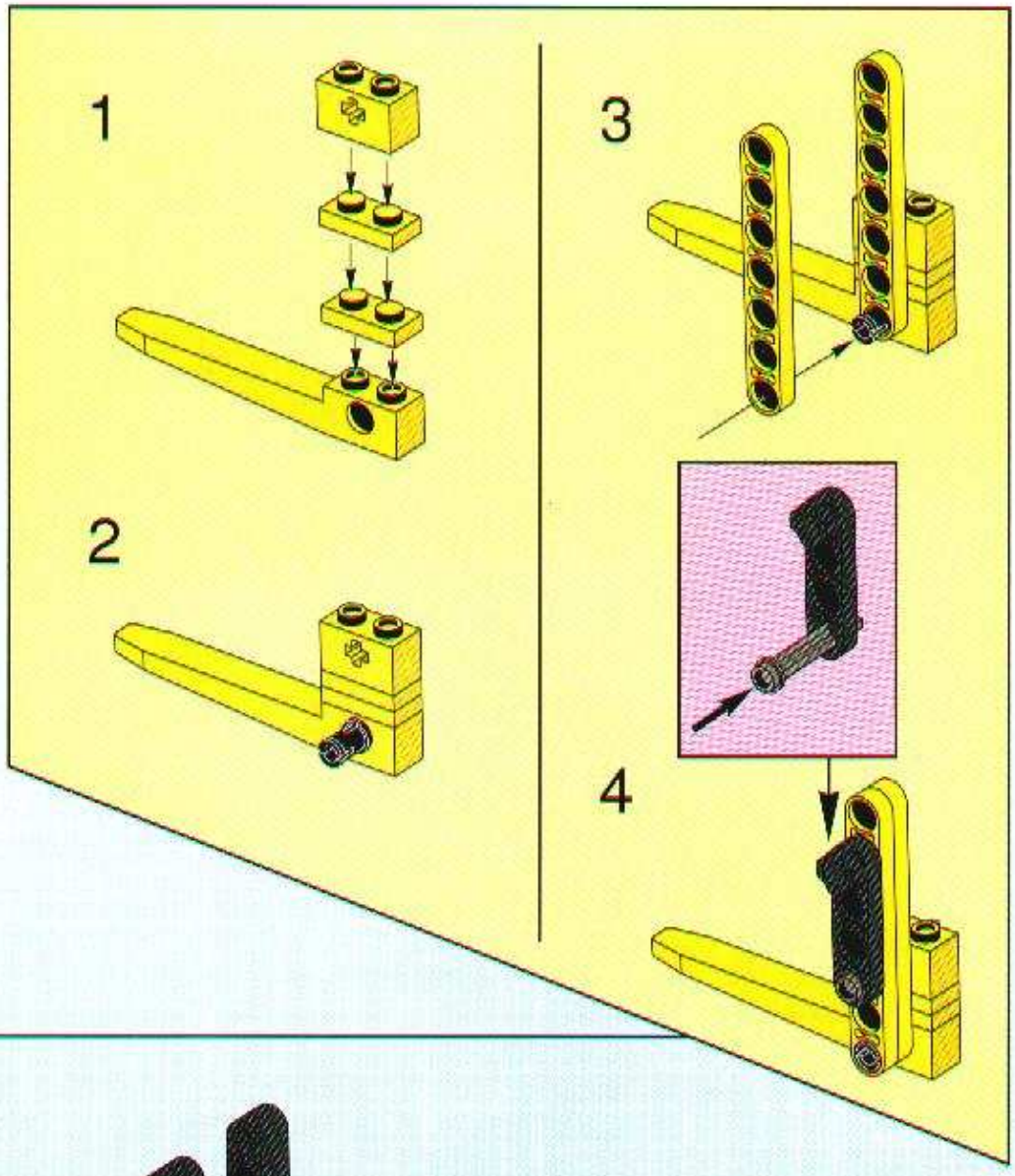

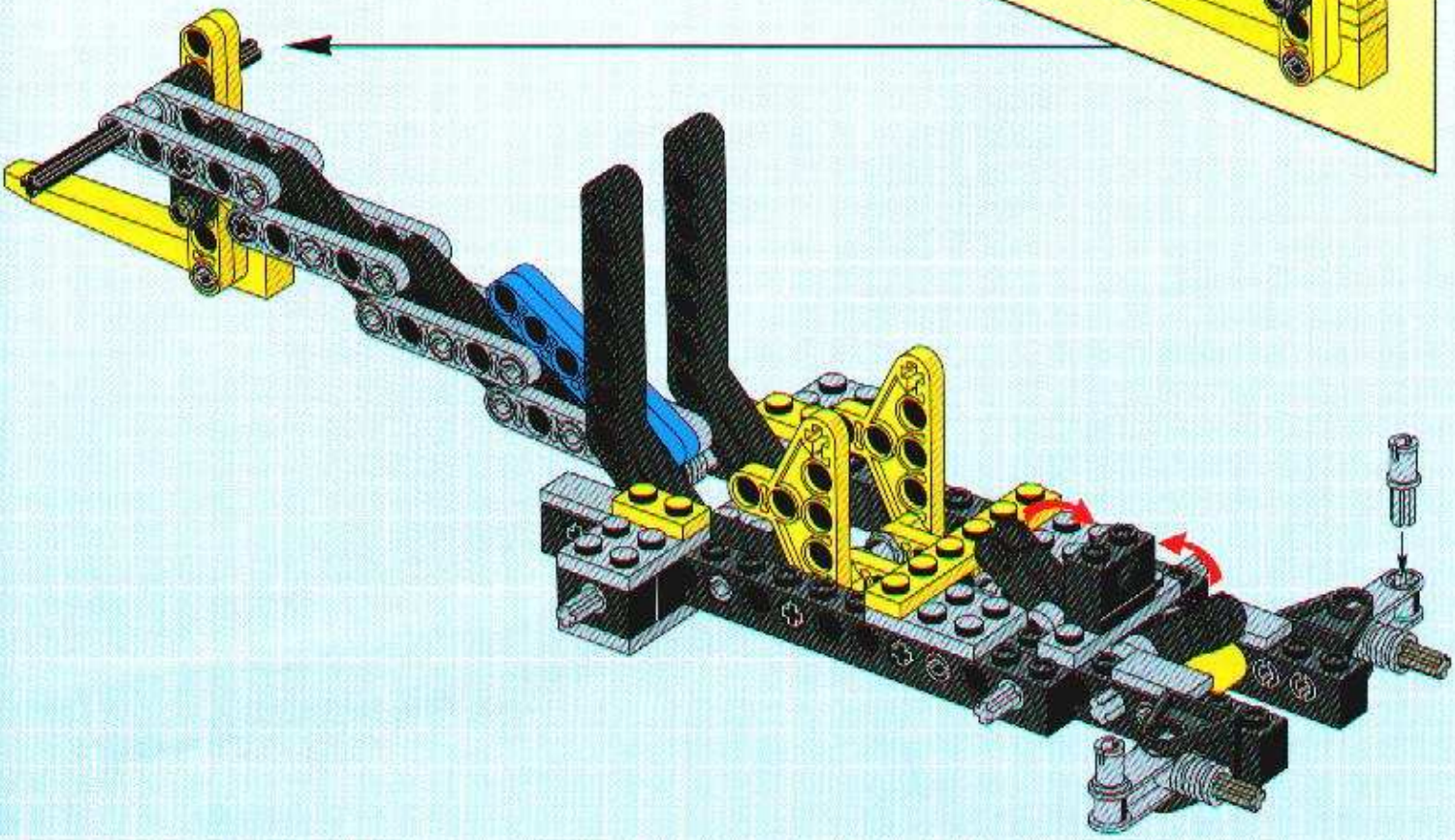

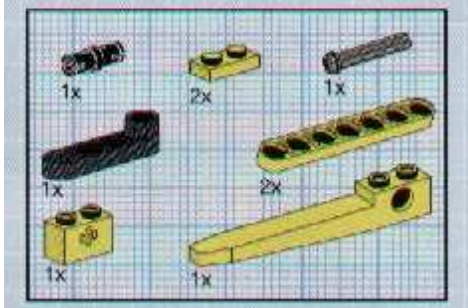

11

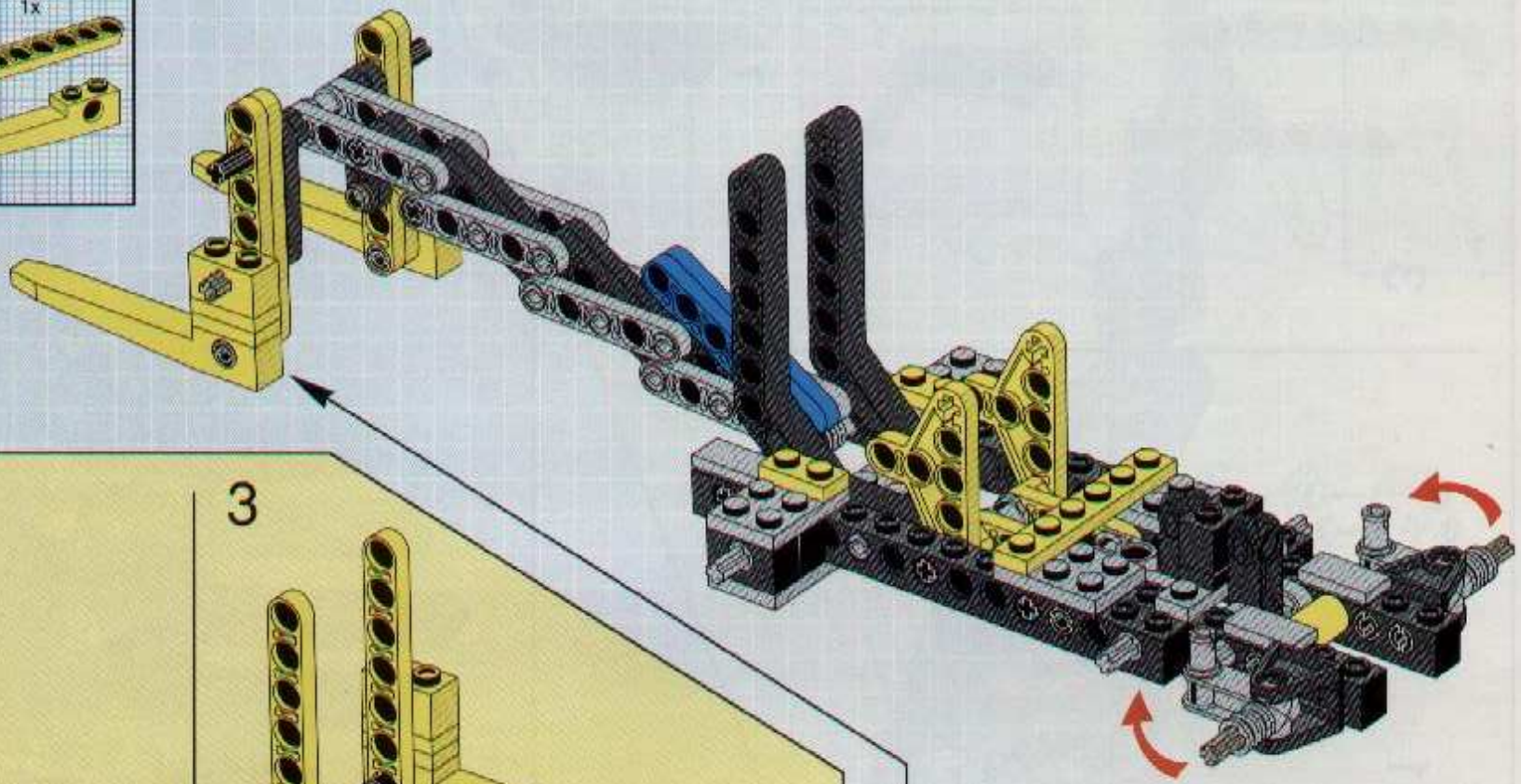

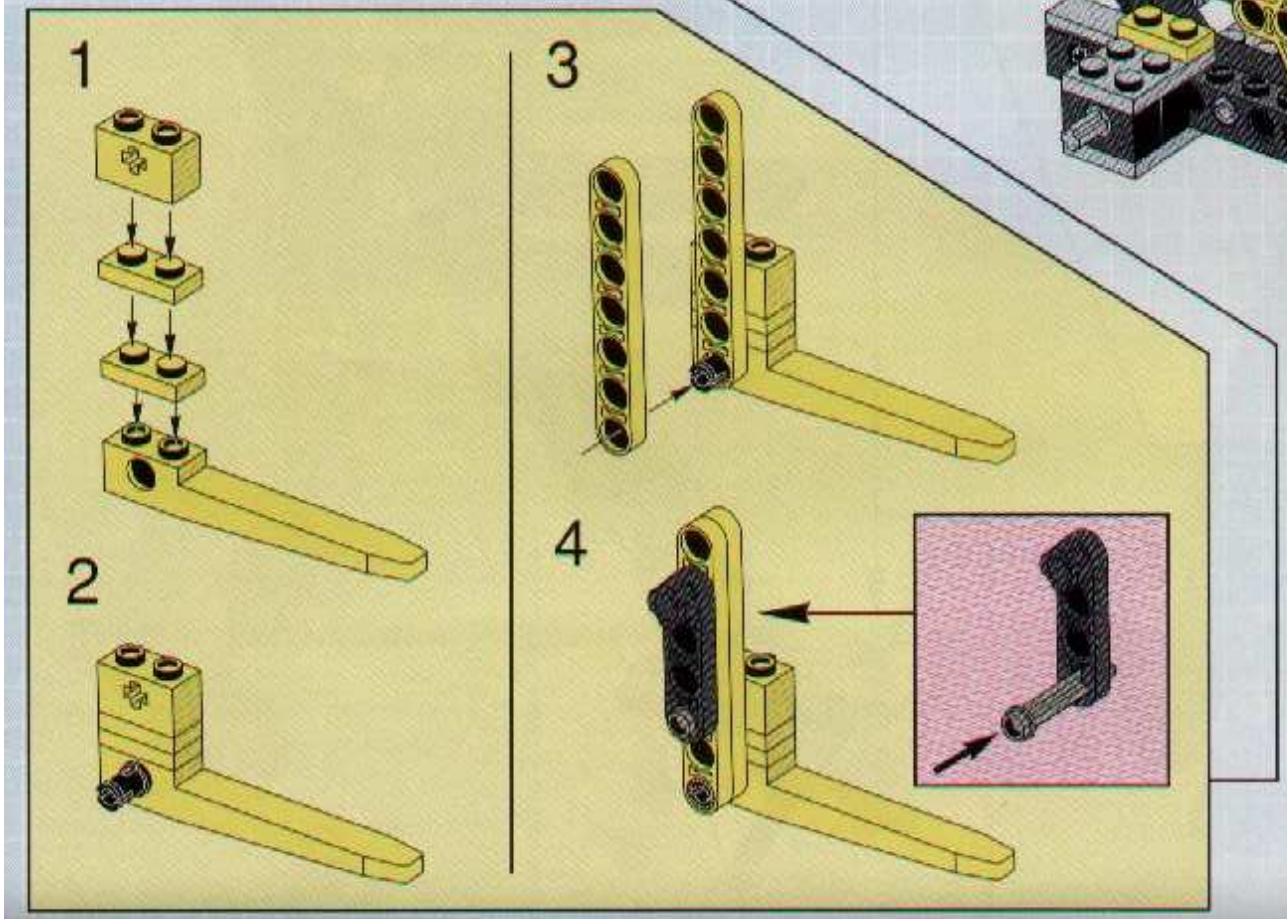

12

13

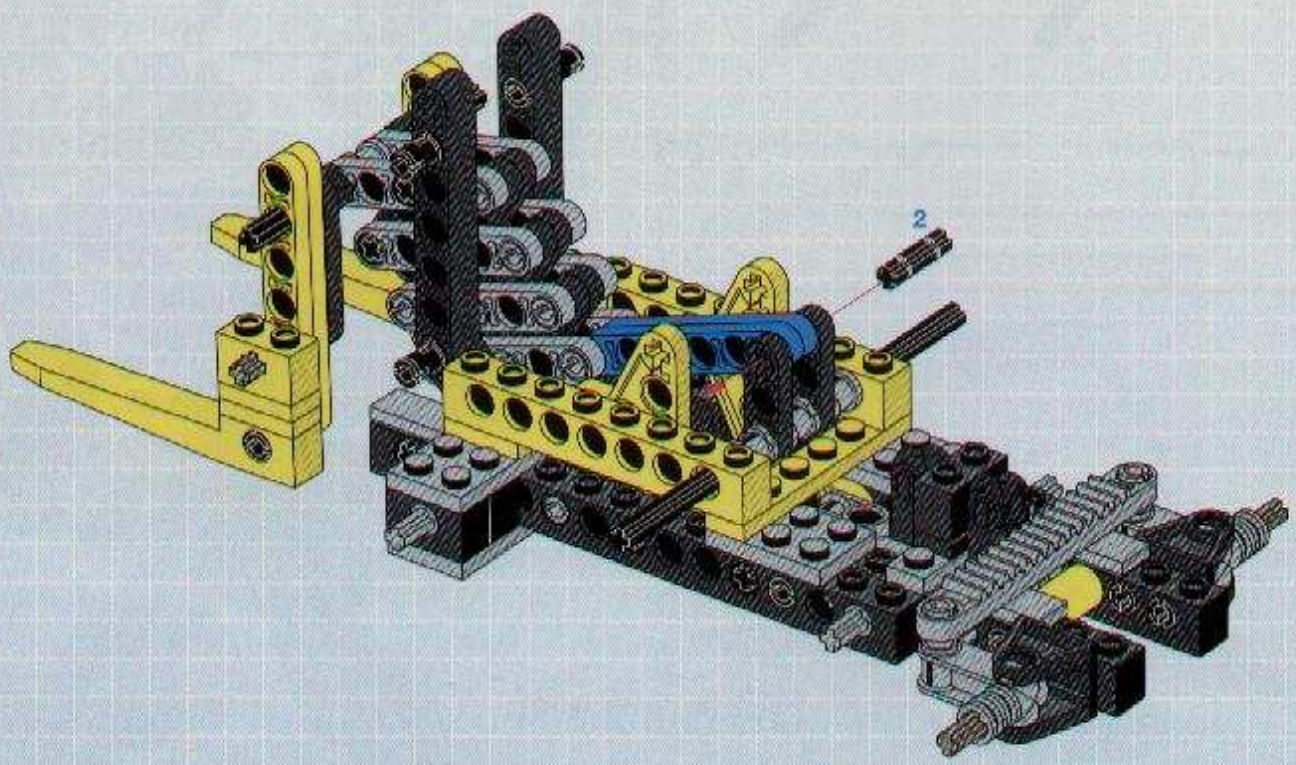

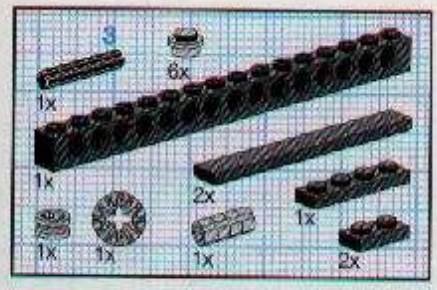

14

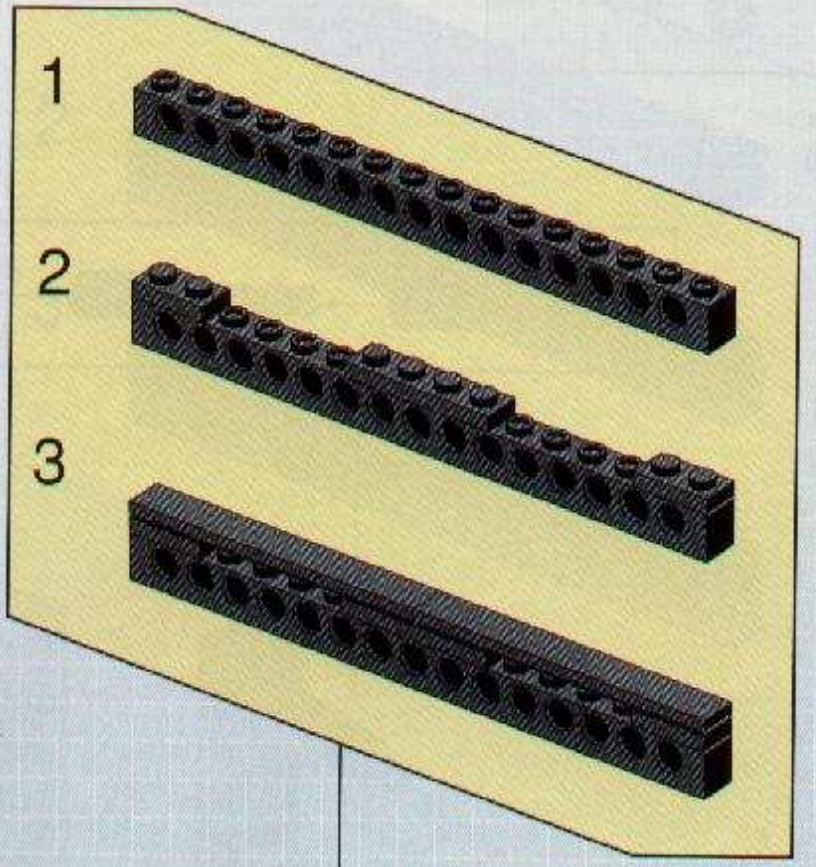

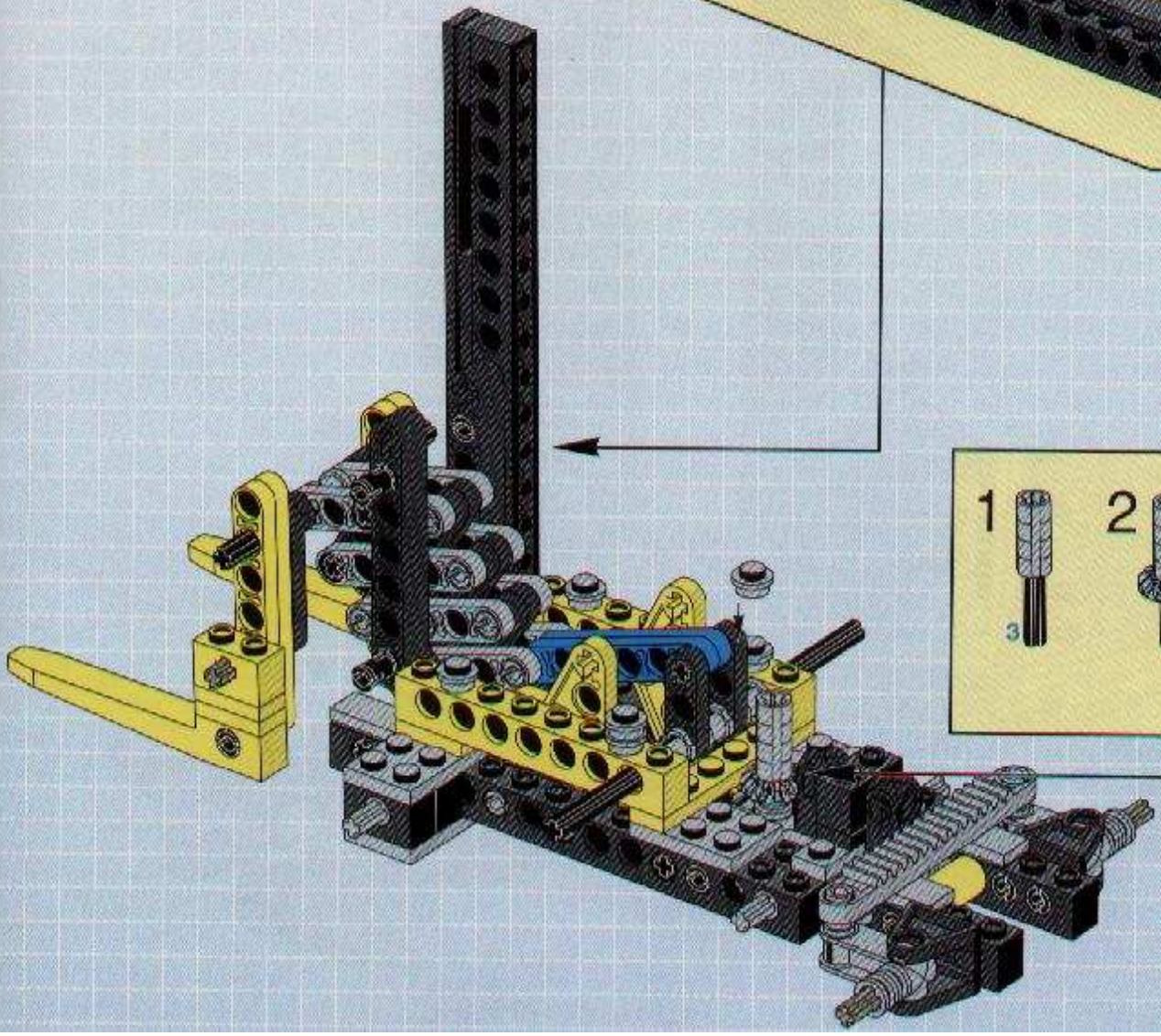

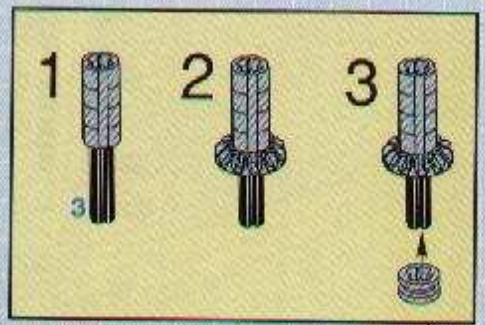

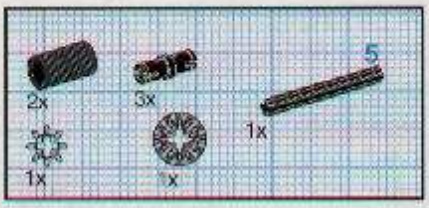

15

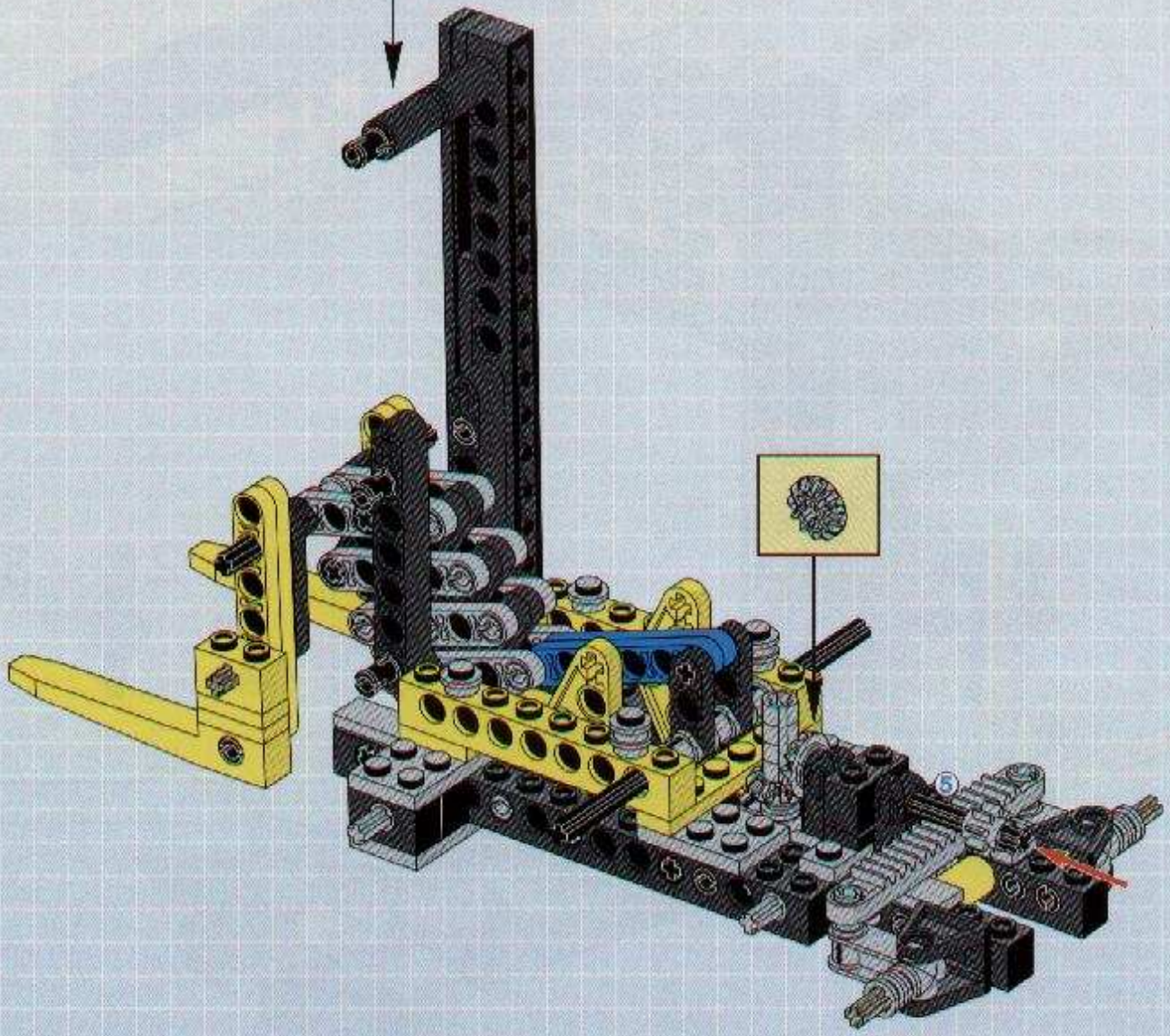

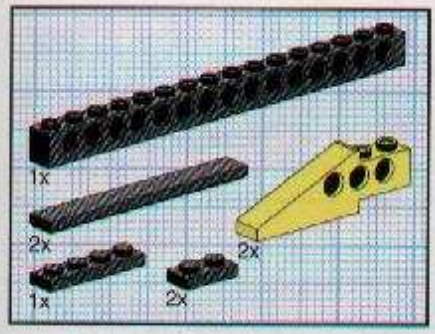

16

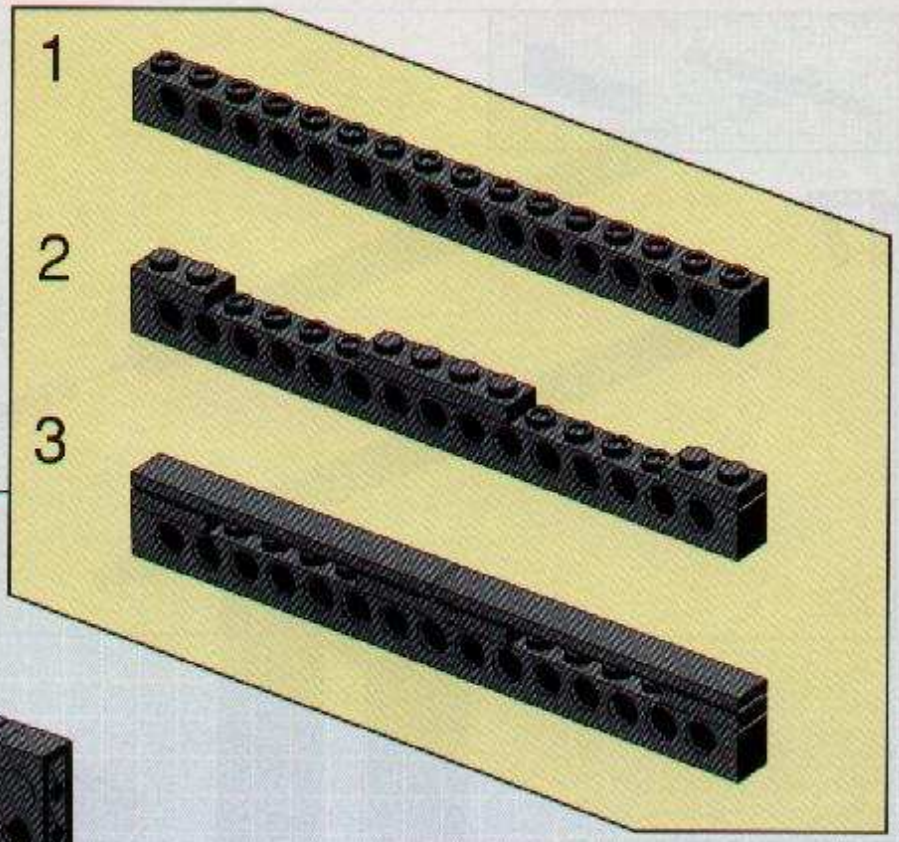

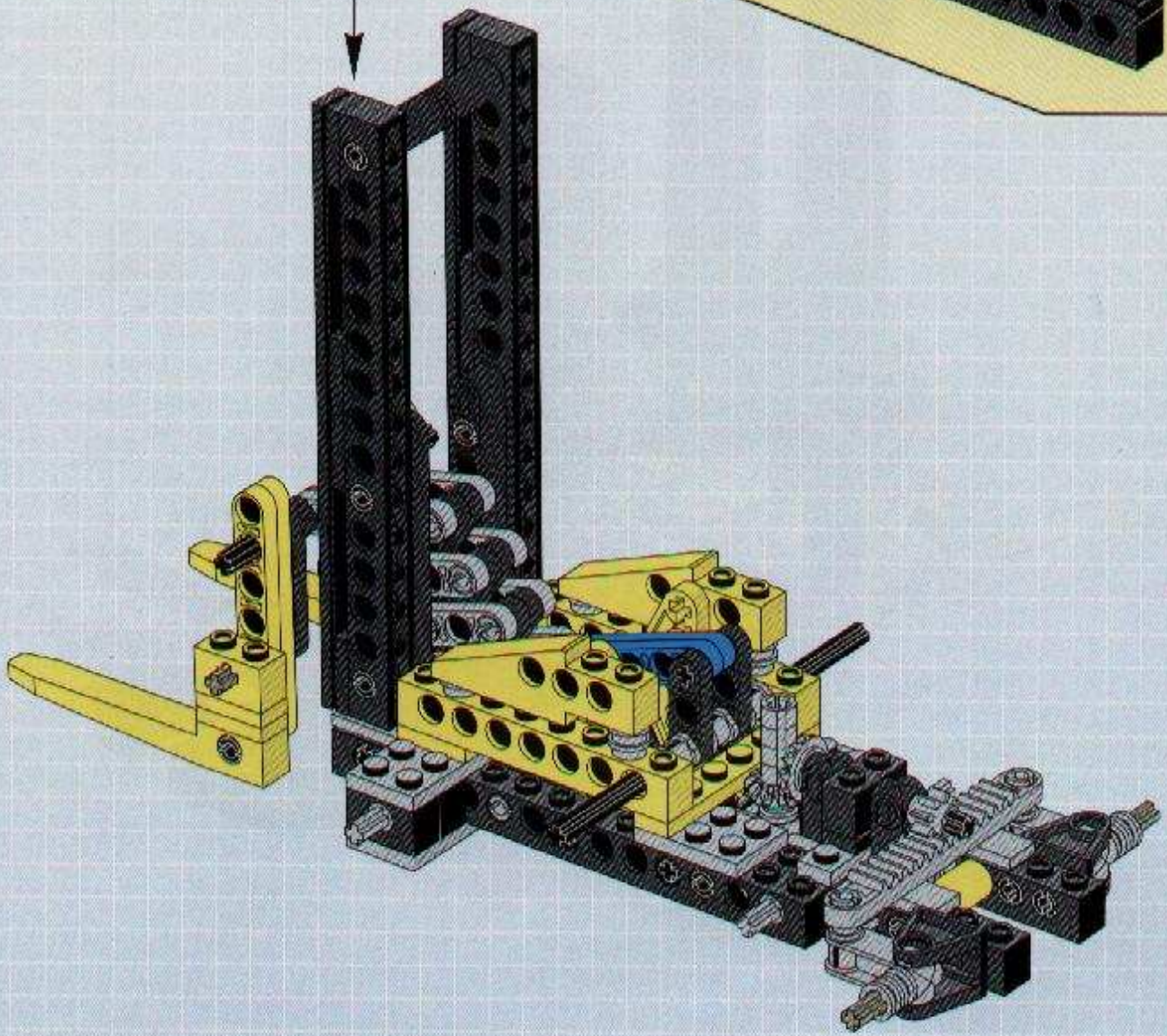

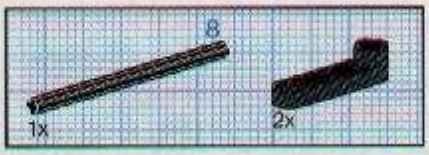

17

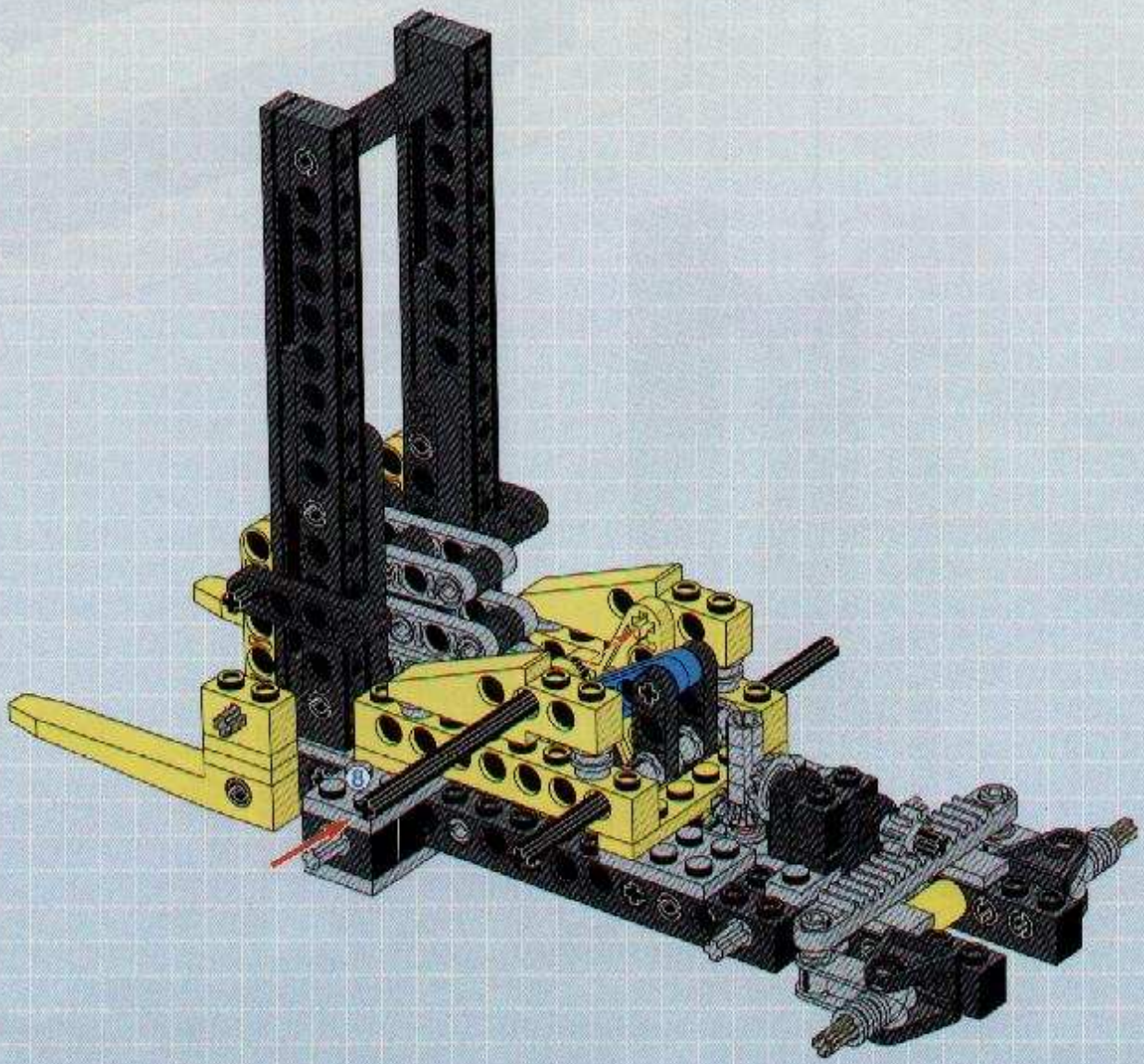

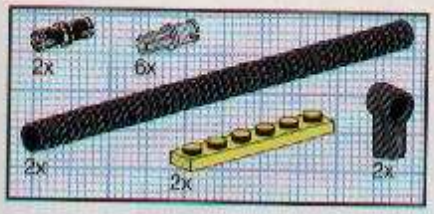

18

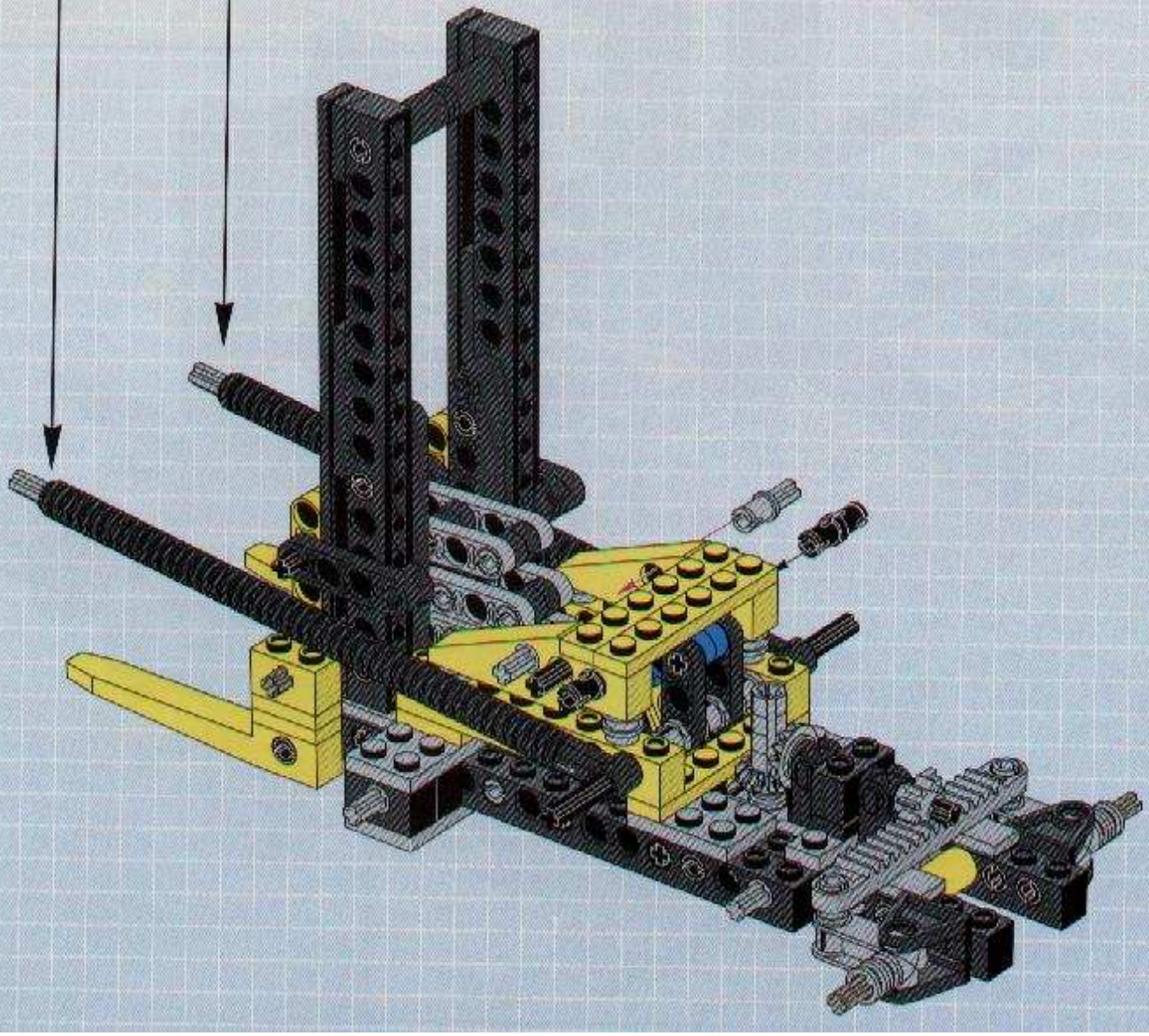

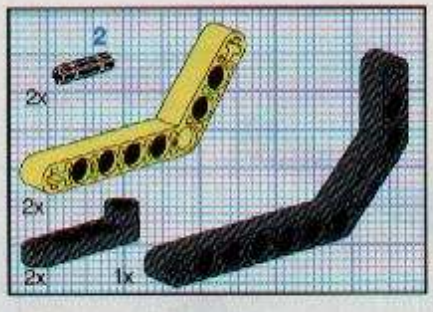

19

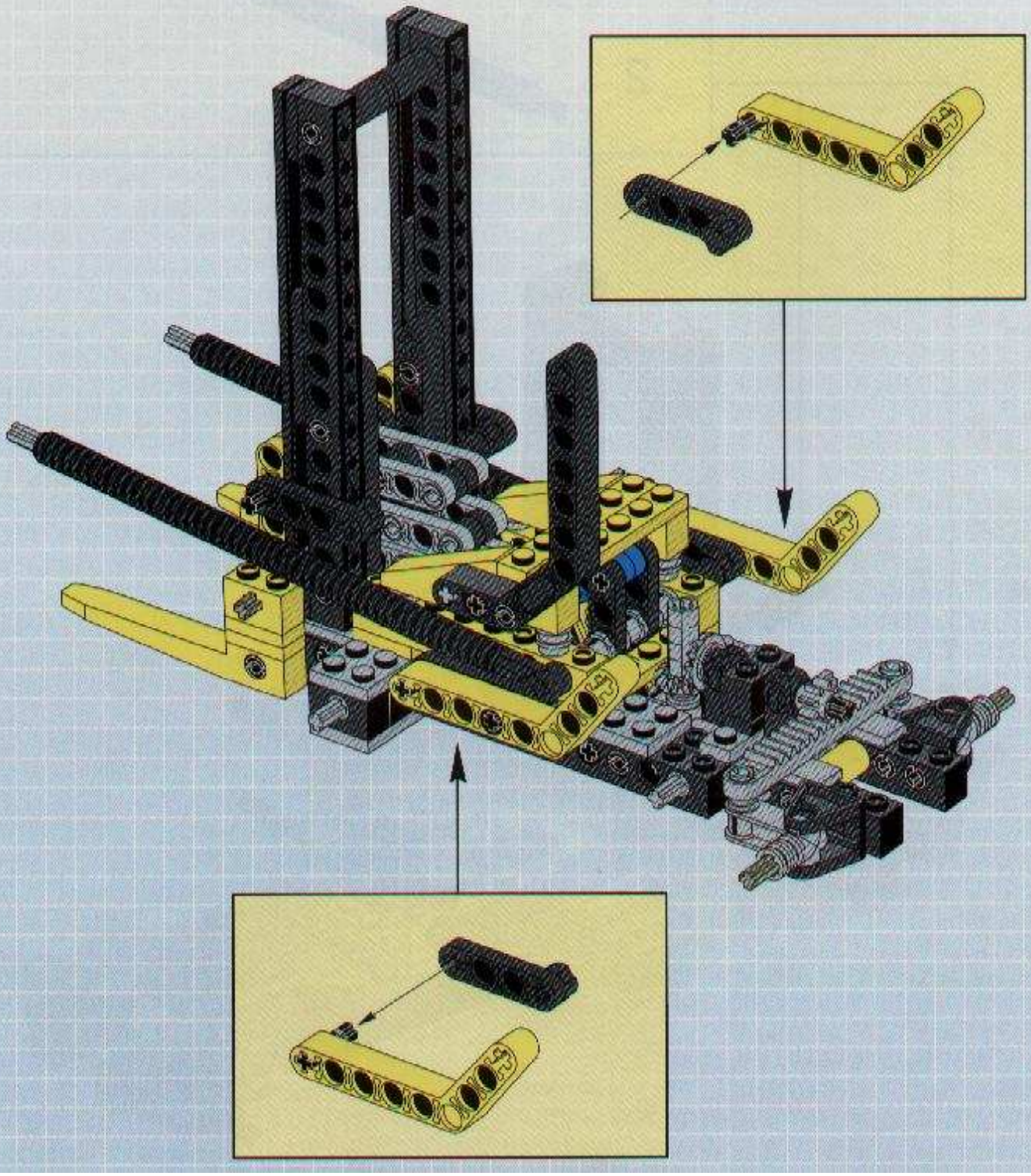

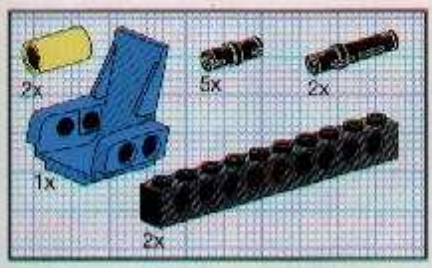

20

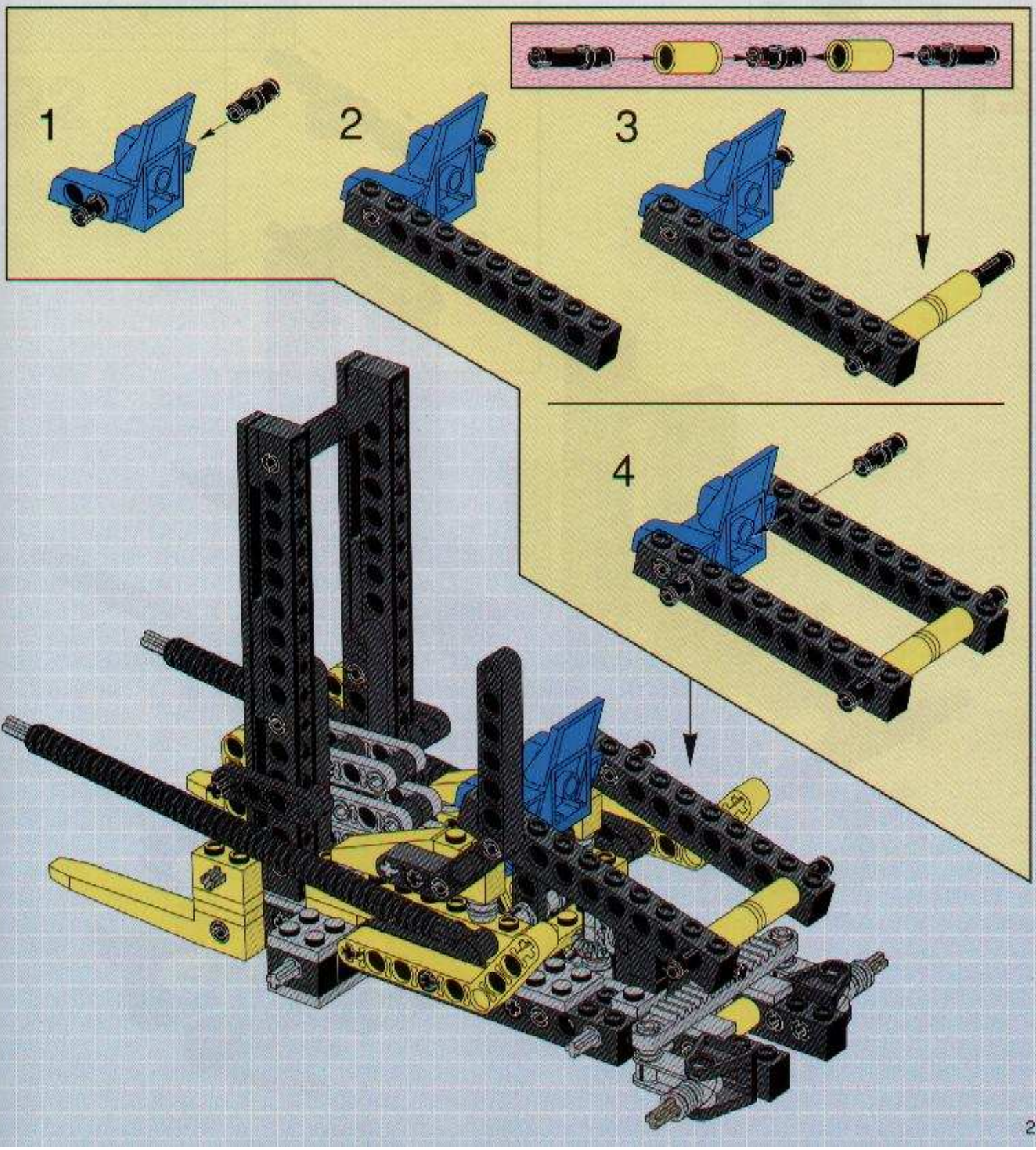

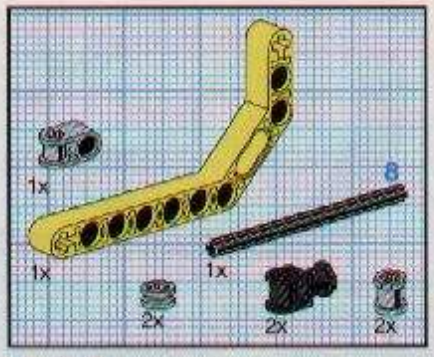

21

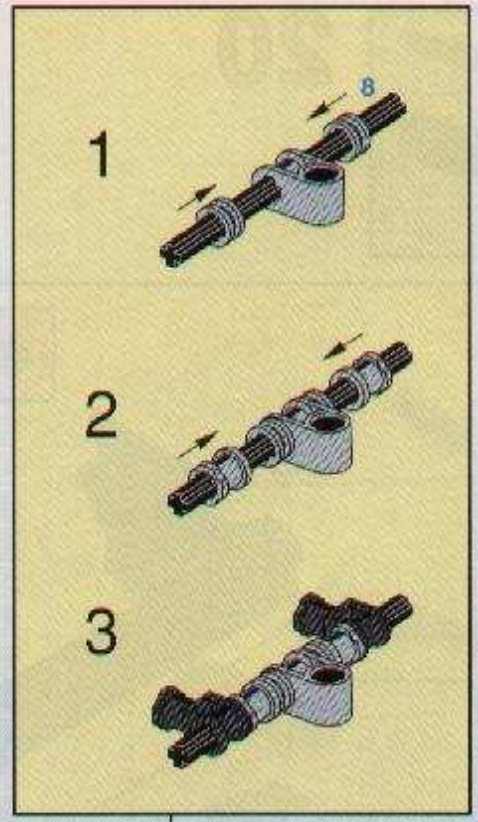

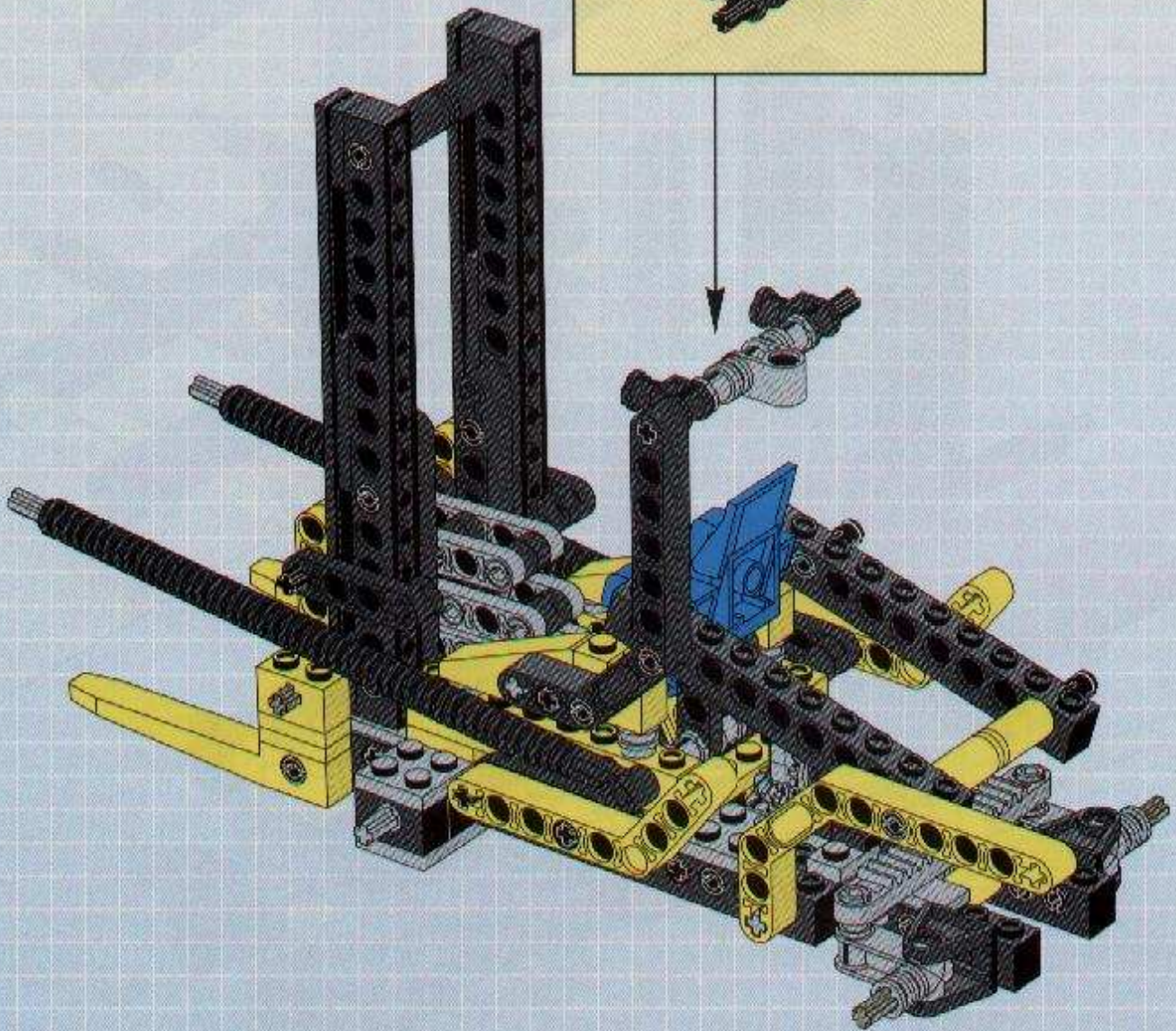

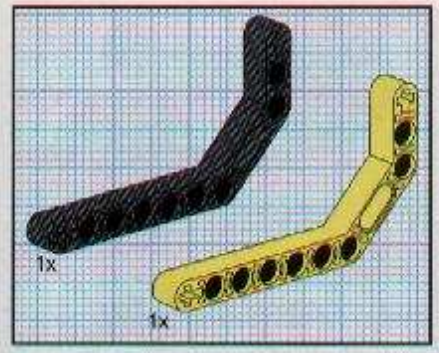

22

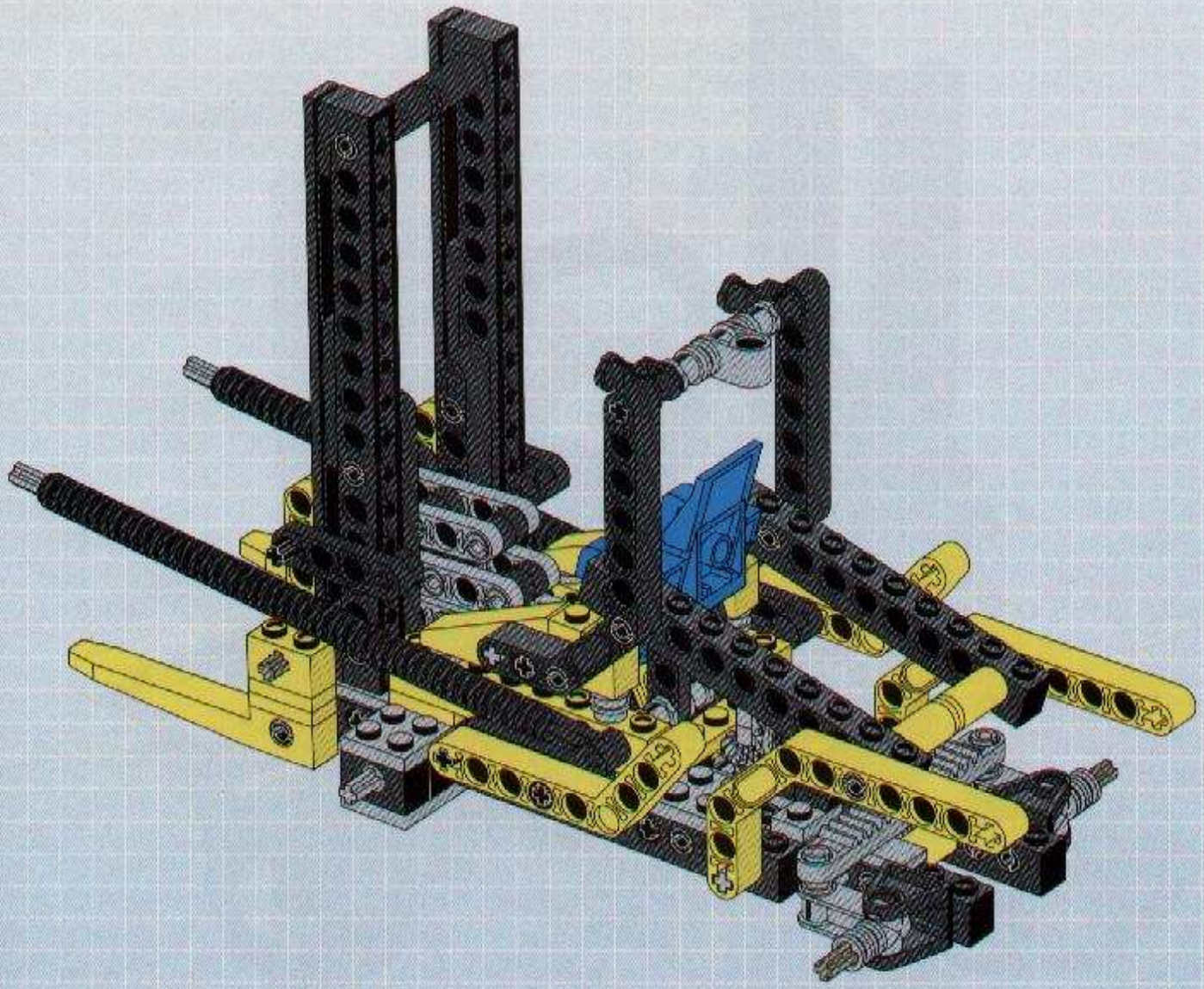

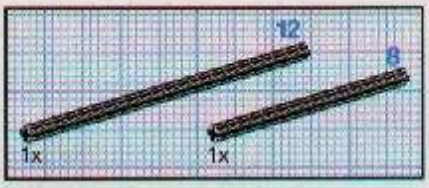

23

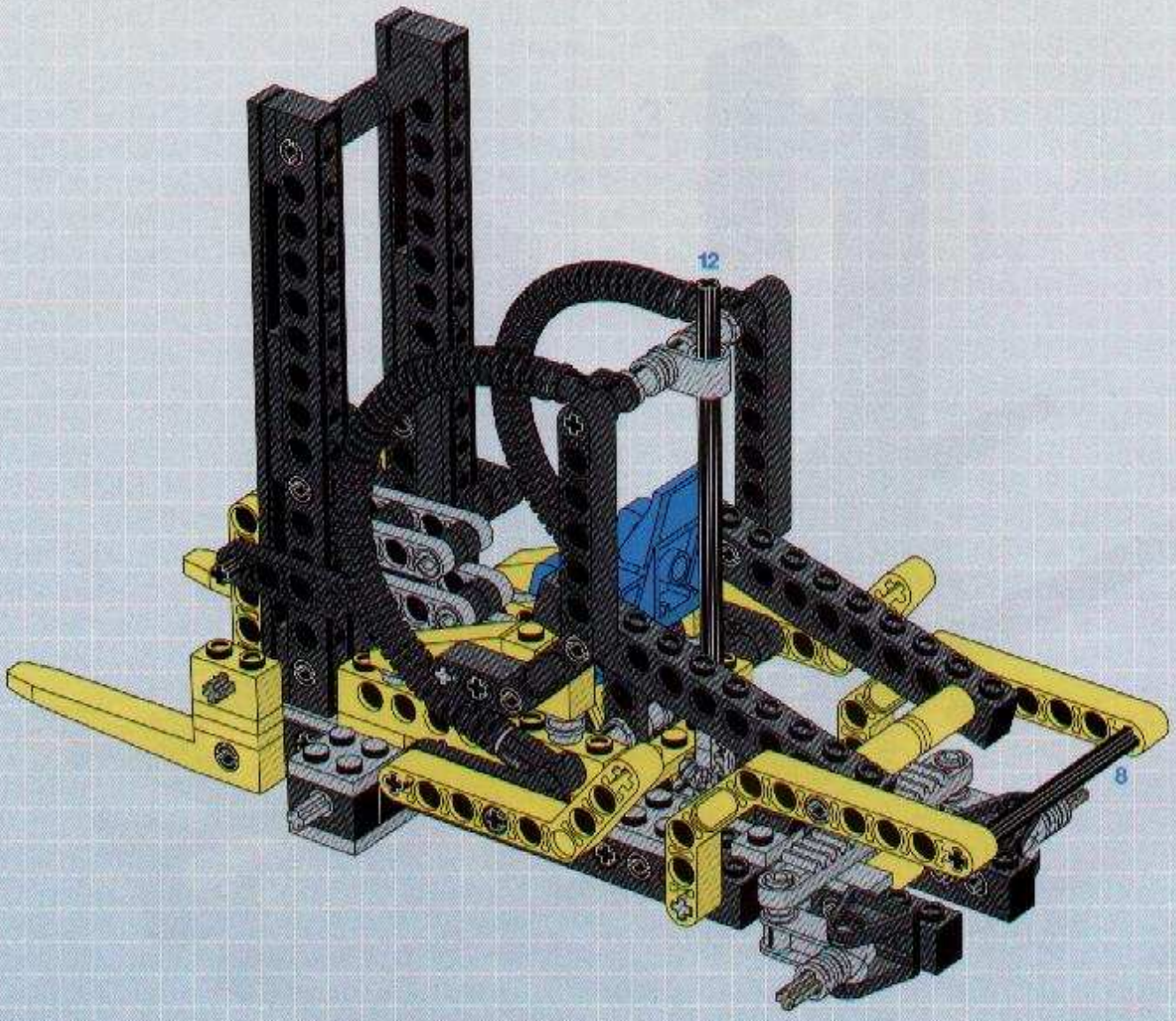

24

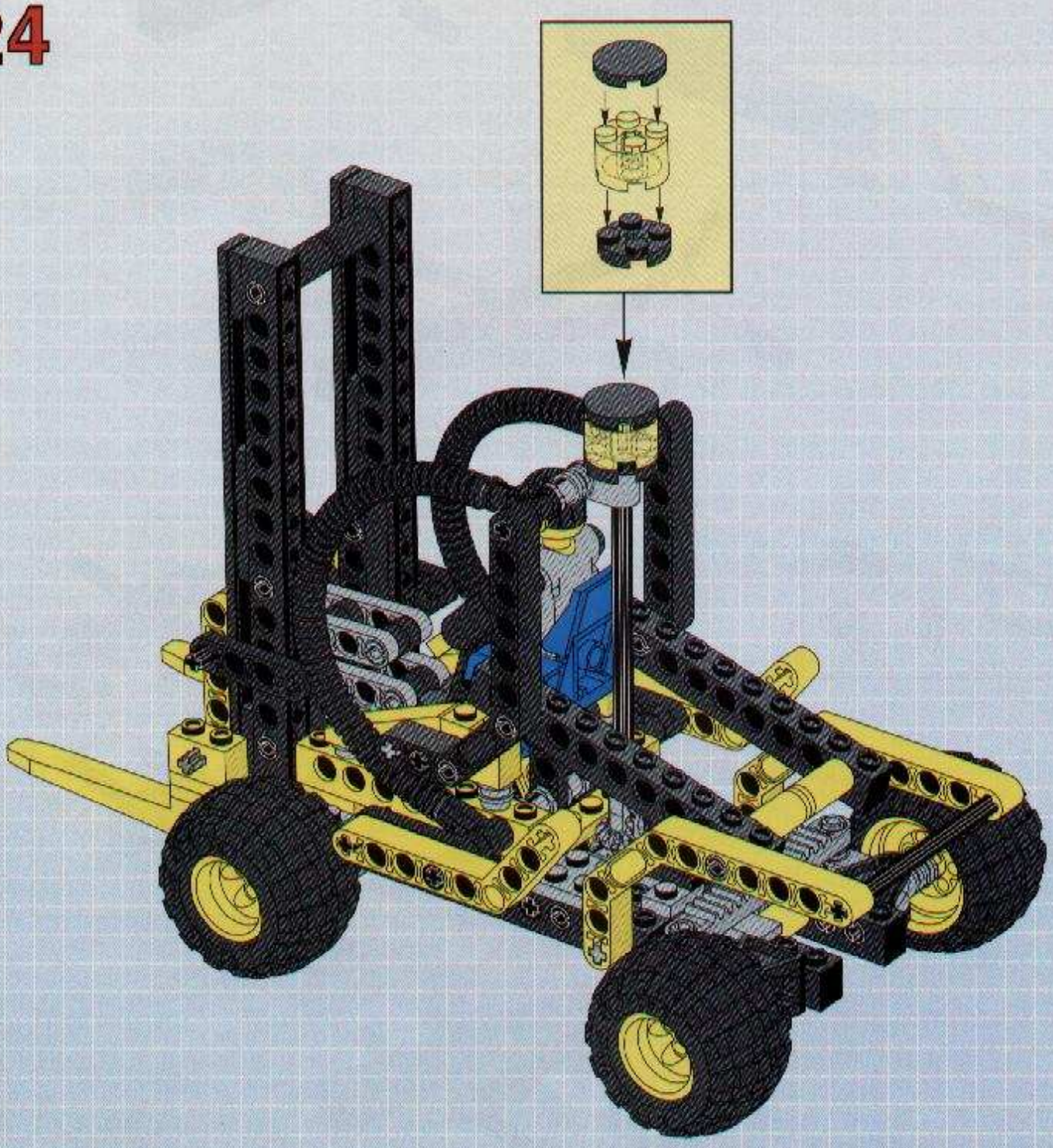

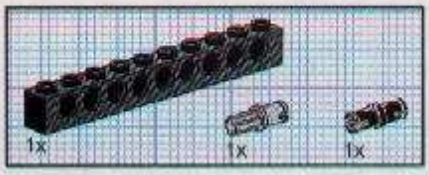

1

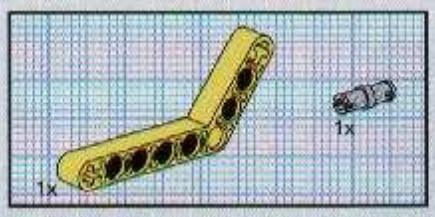

2

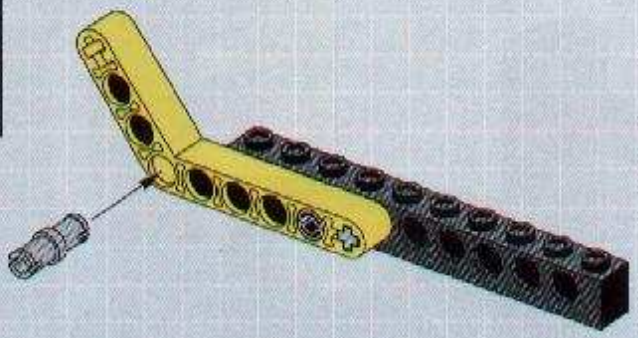

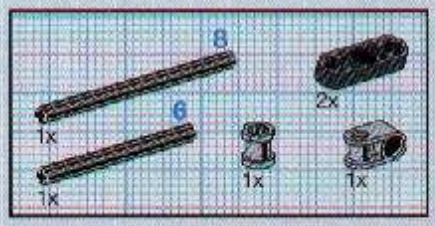

3

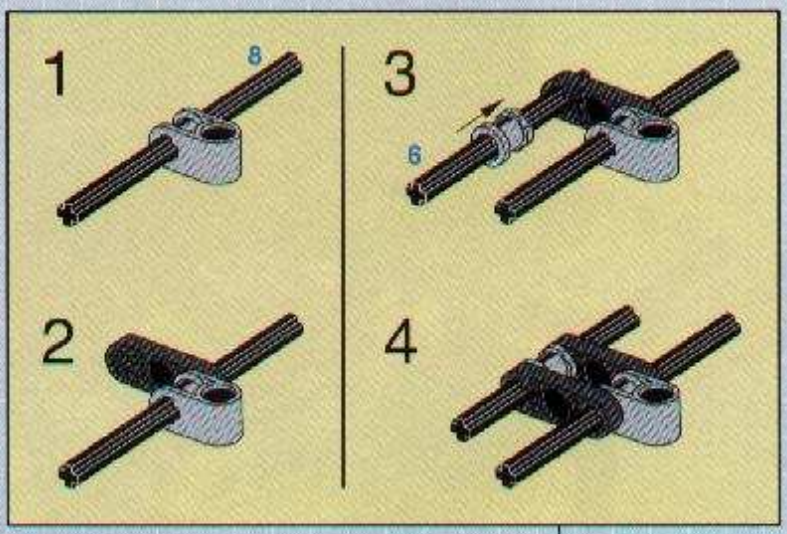

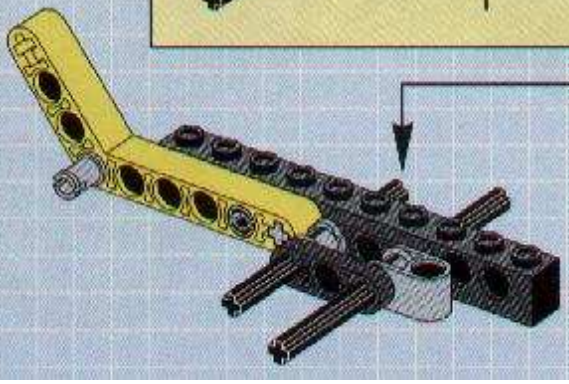

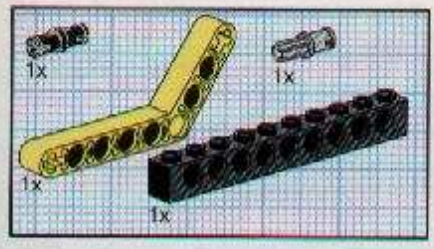

4

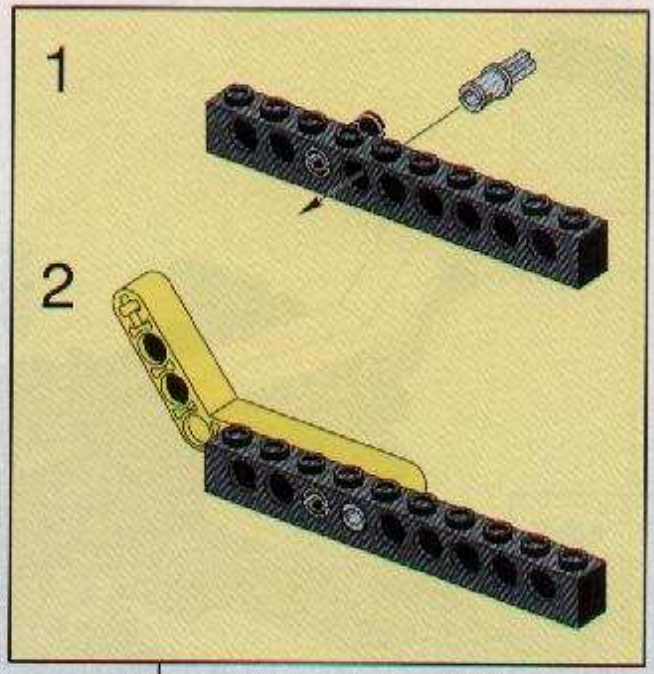

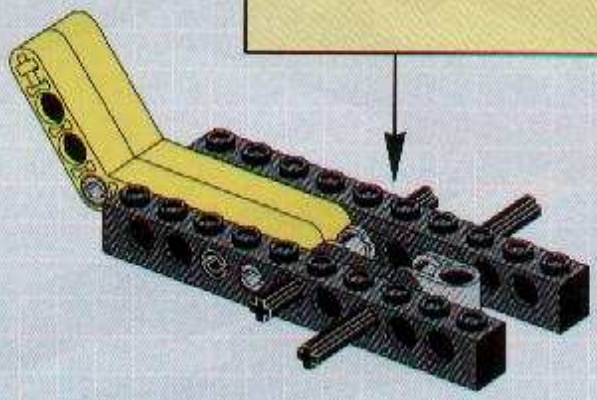

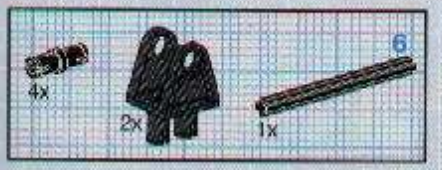

5

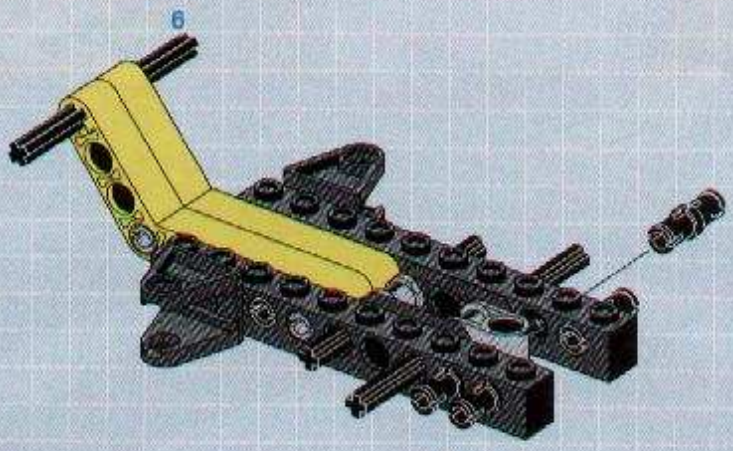

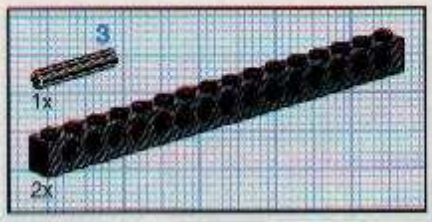

6

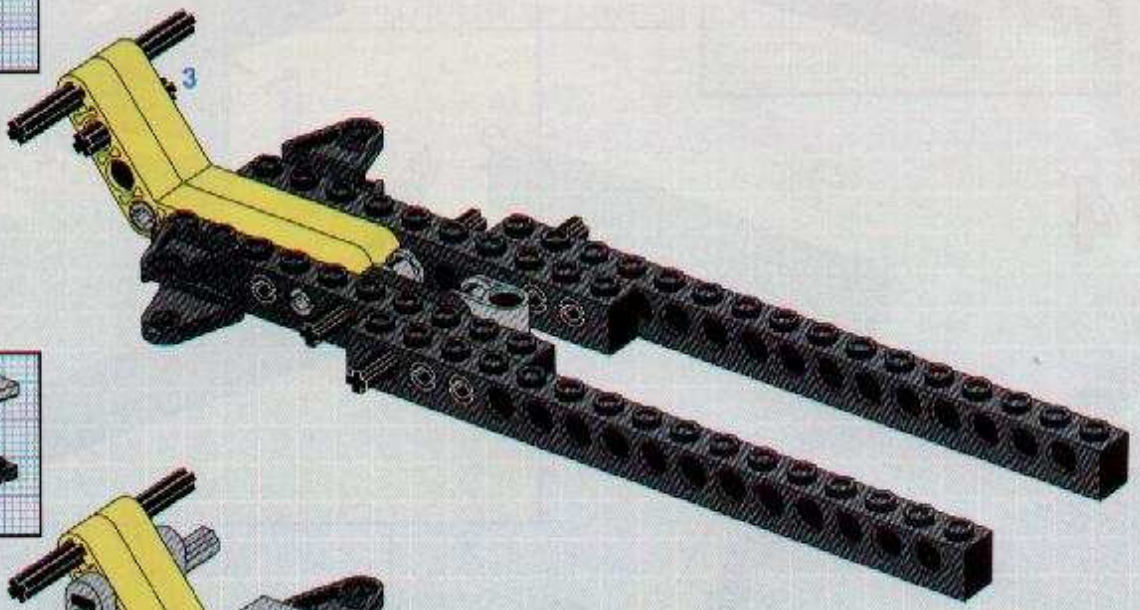

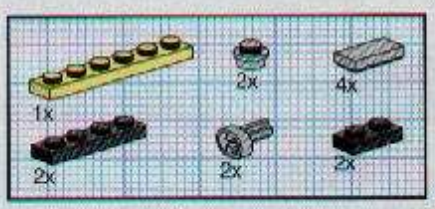

7

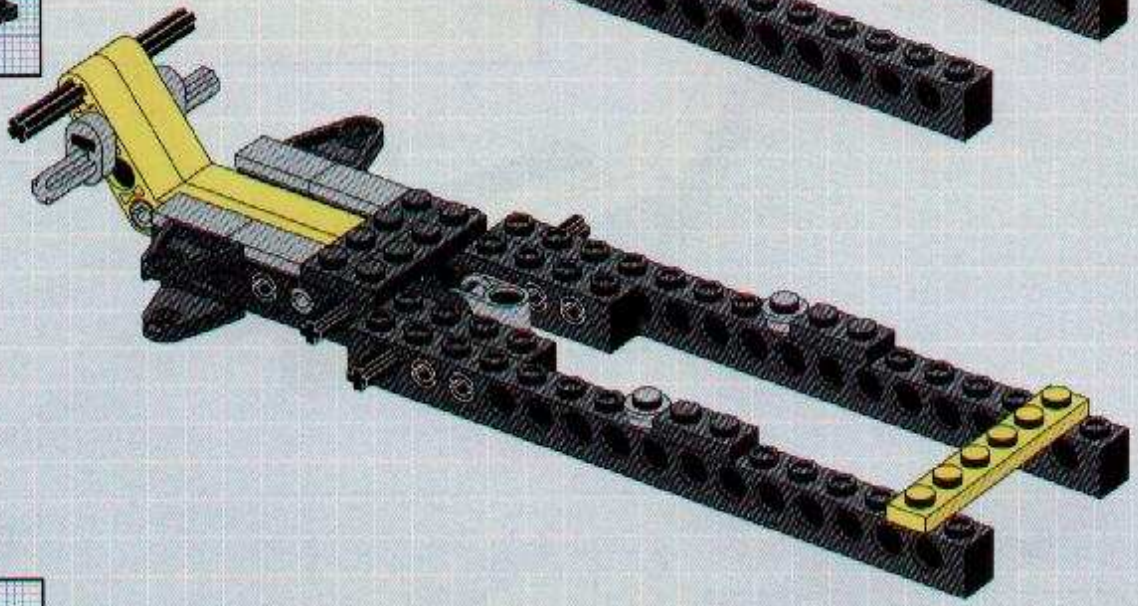

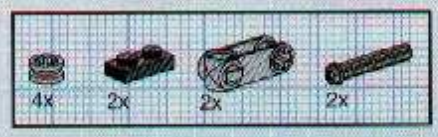

8

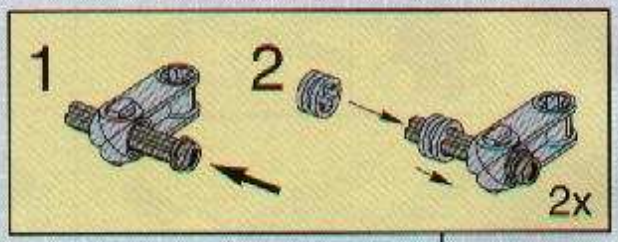

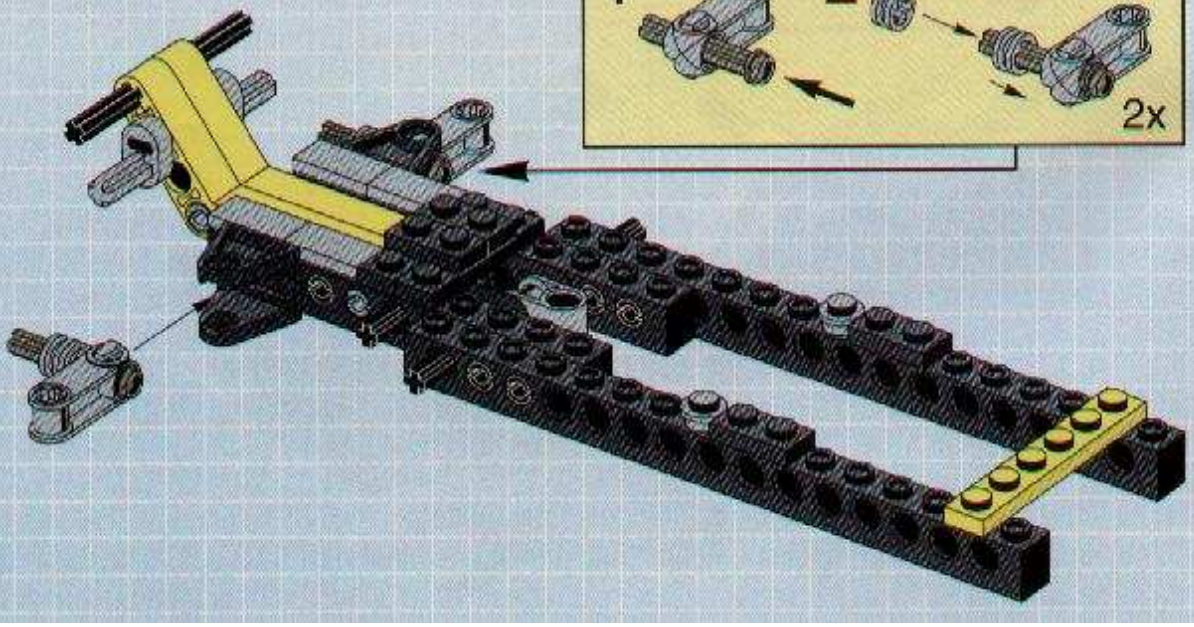

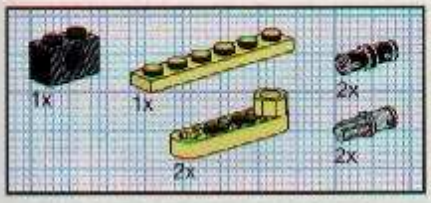

9

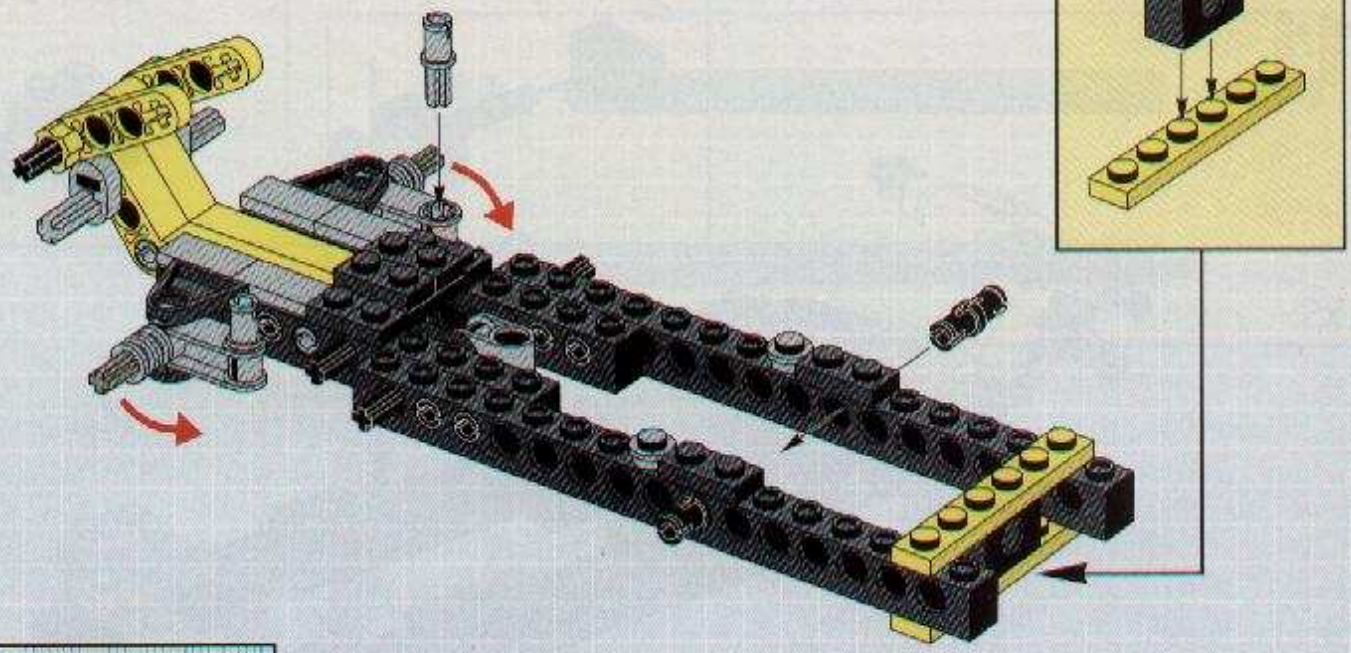

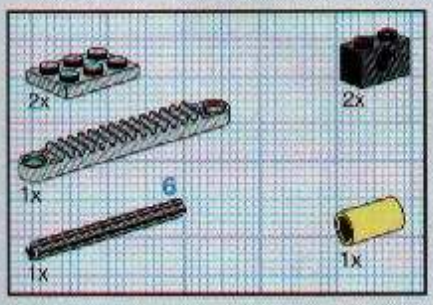

10

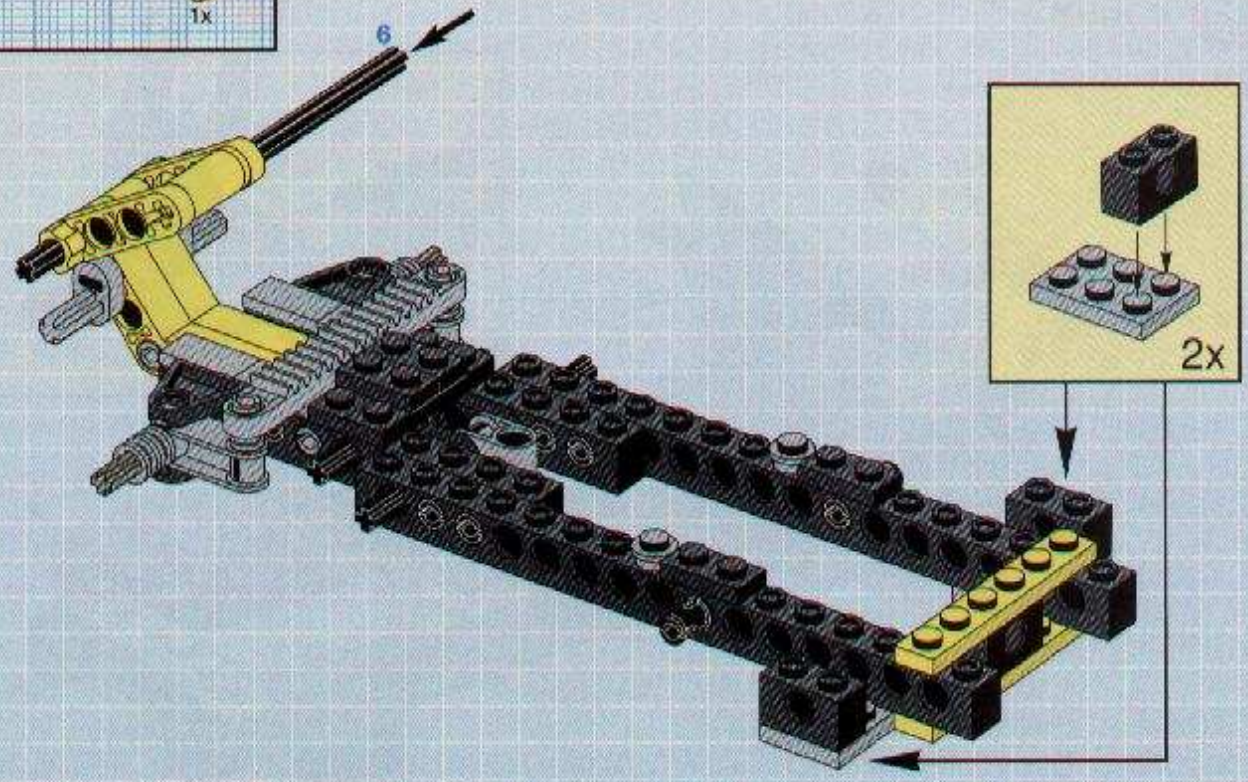

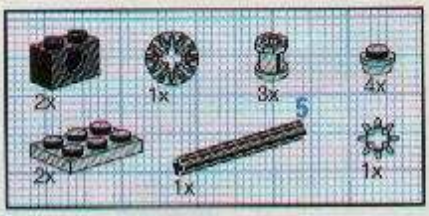

11

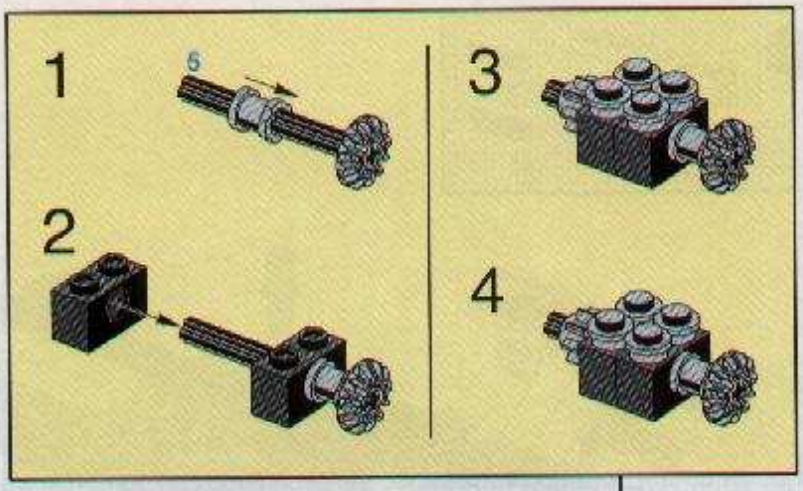

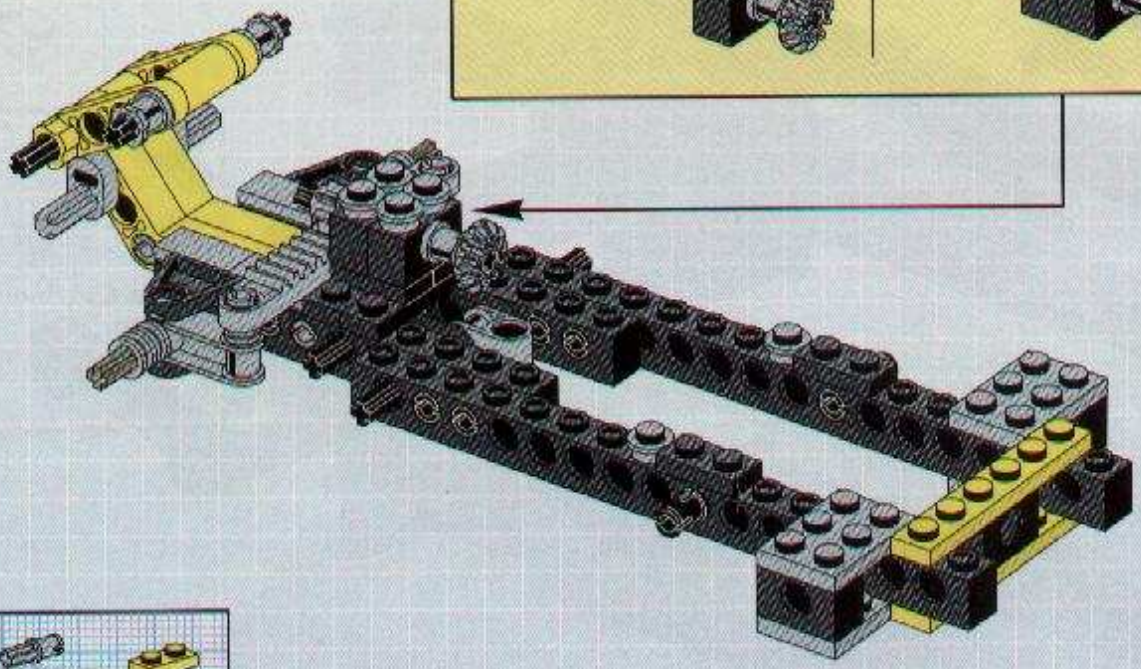

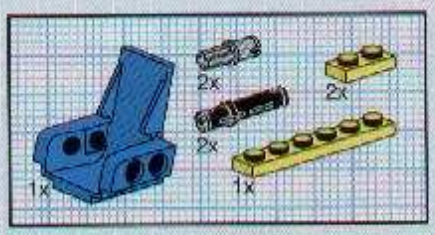

12

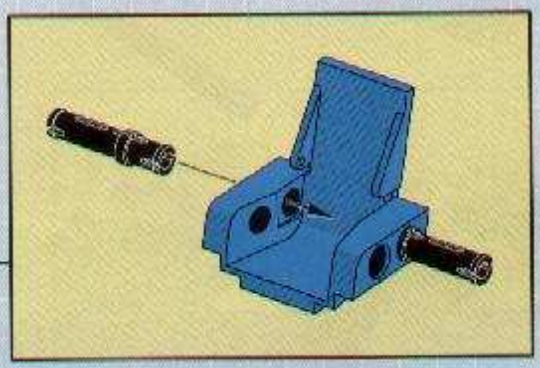

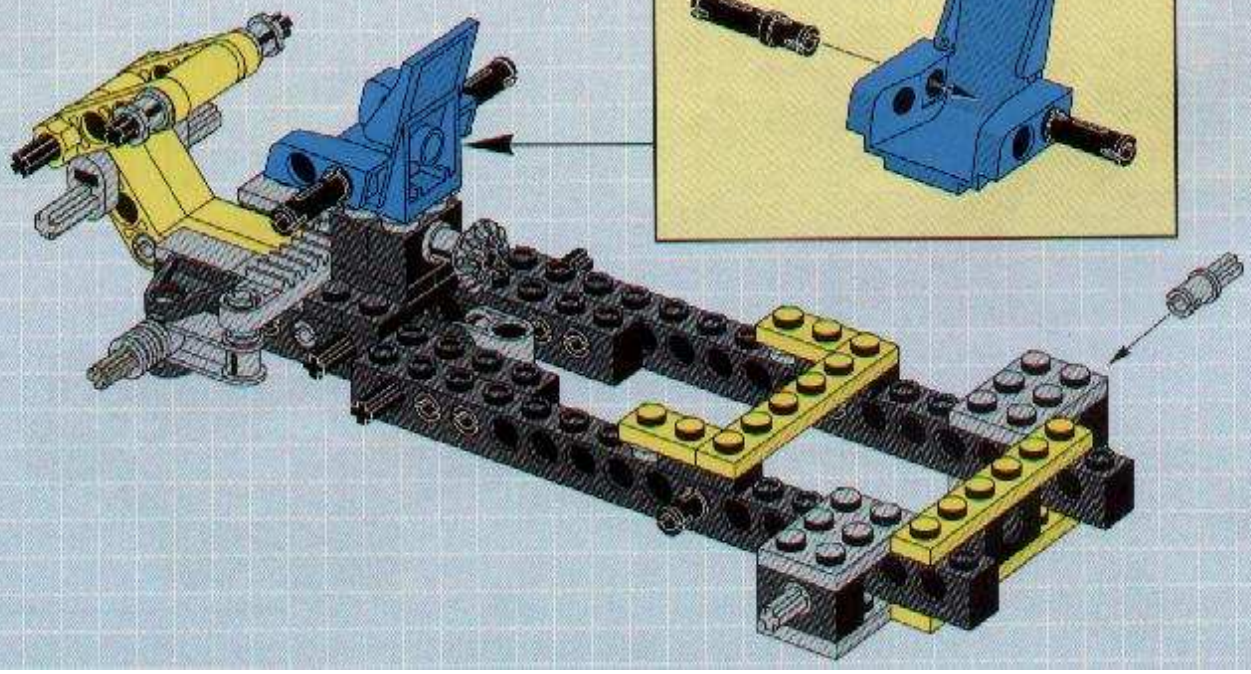

13

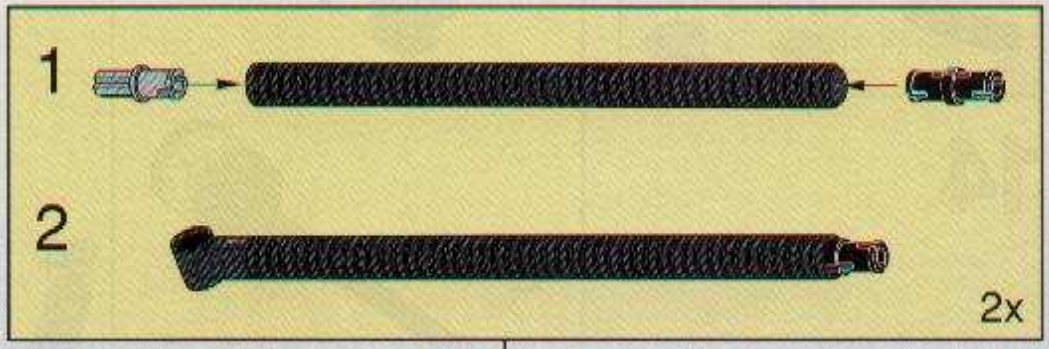

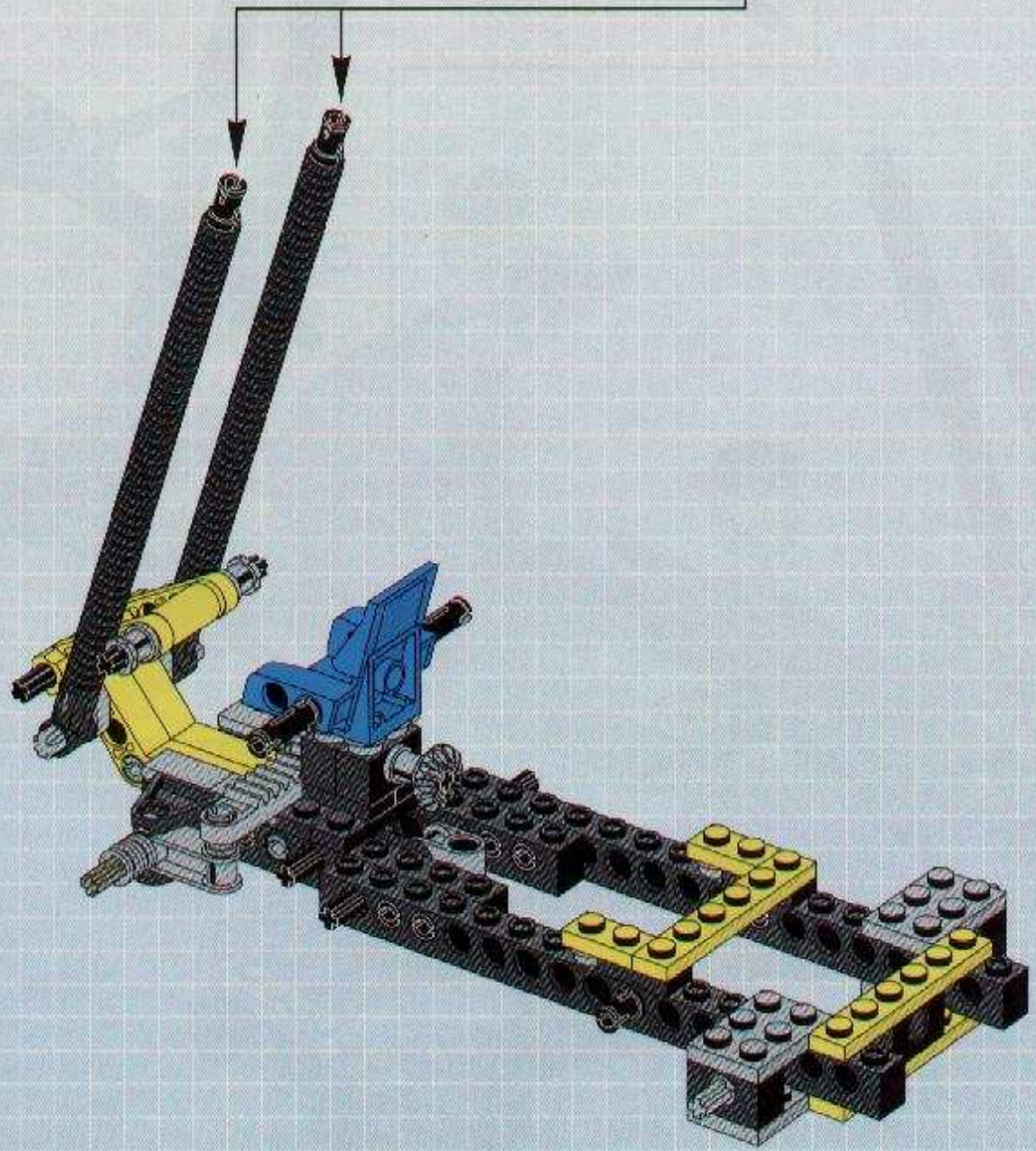

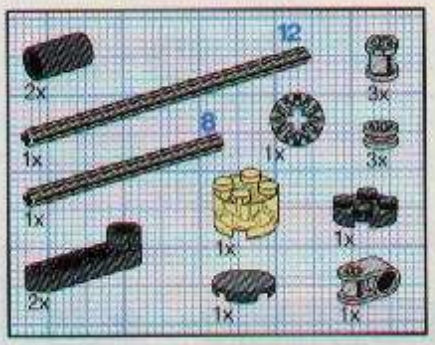

14

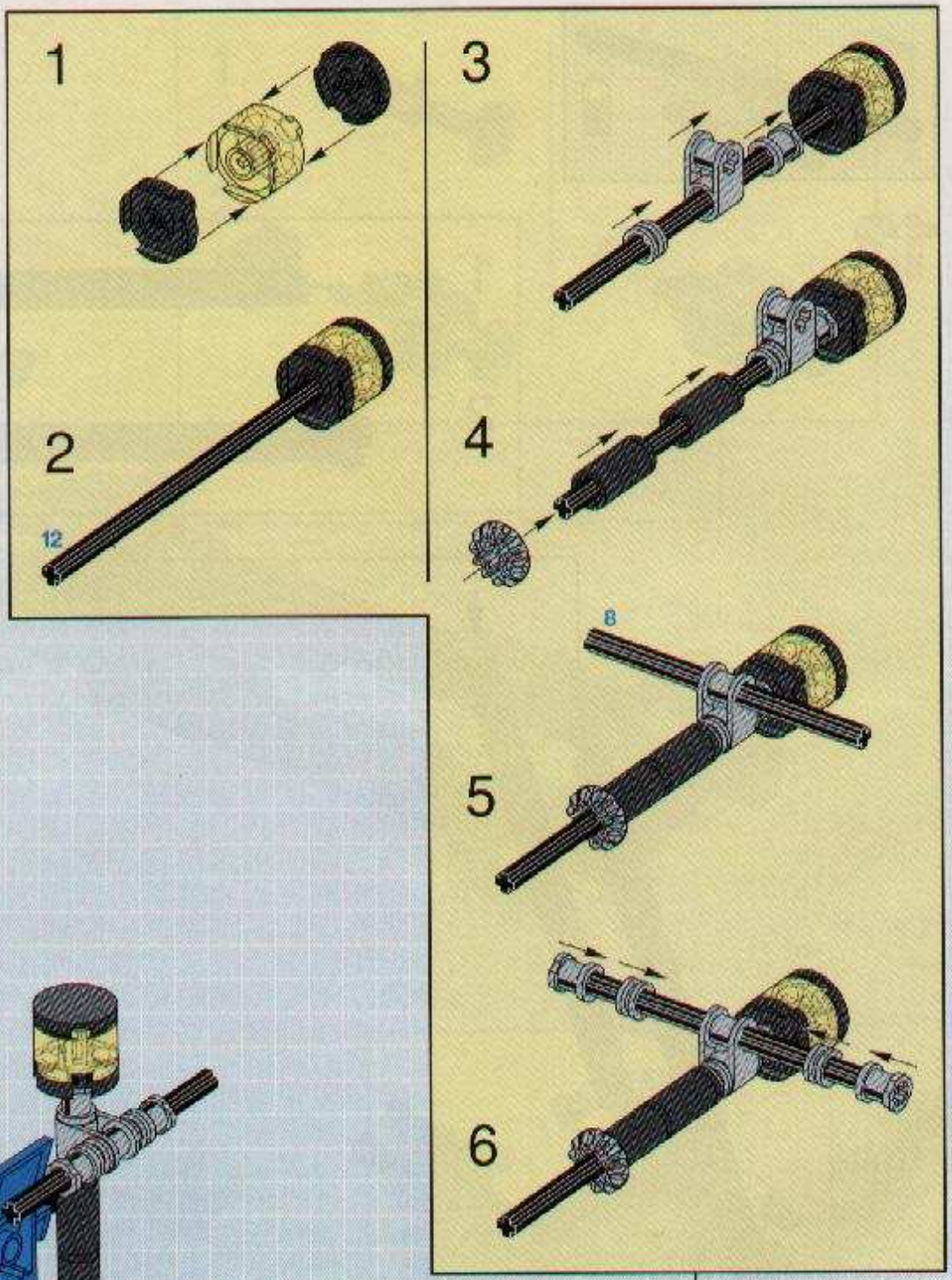

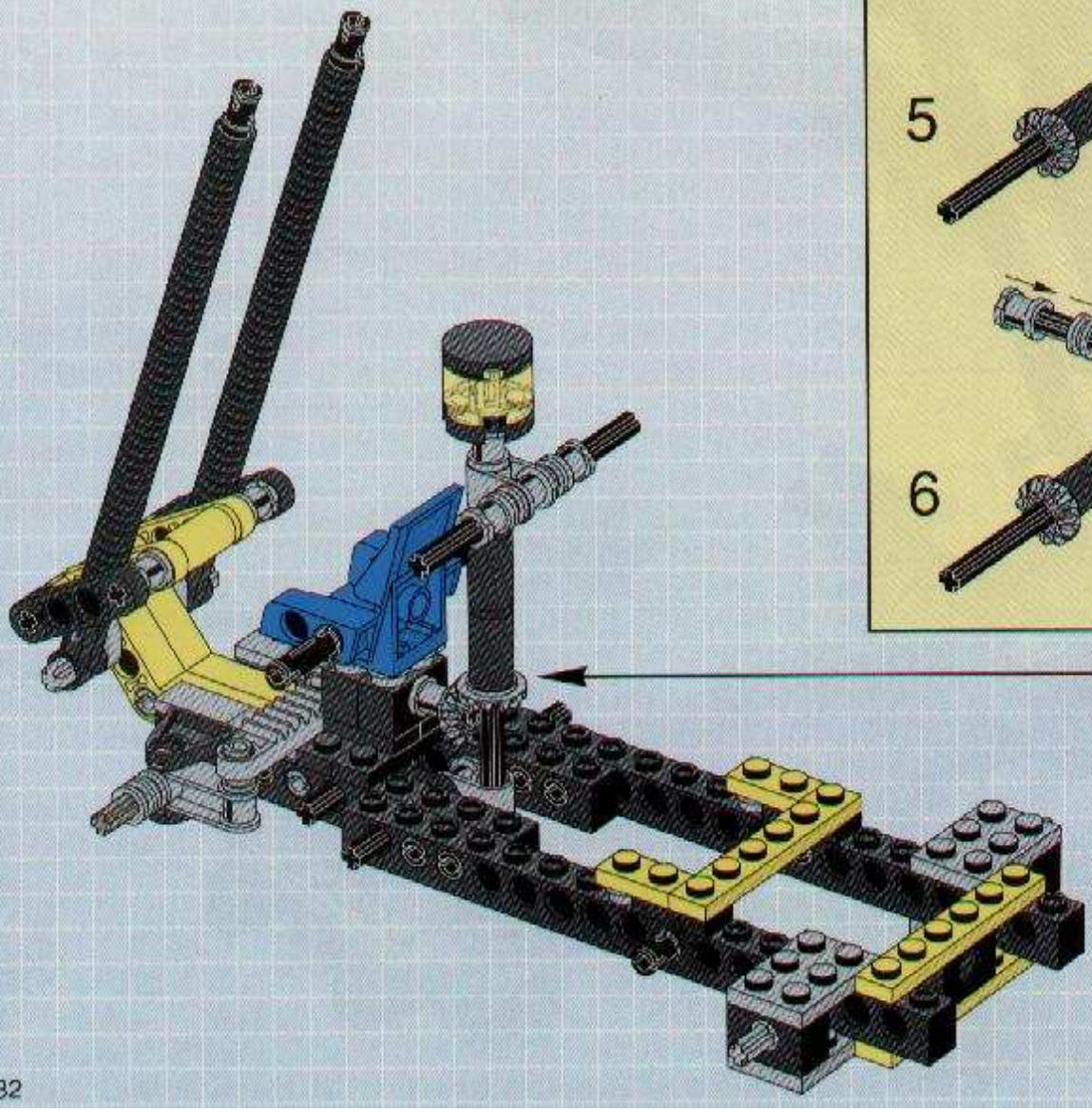

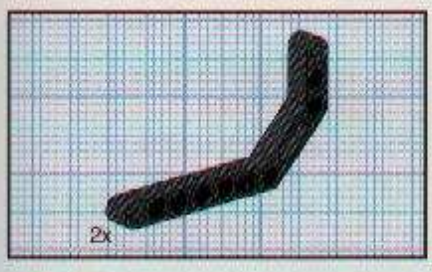

15

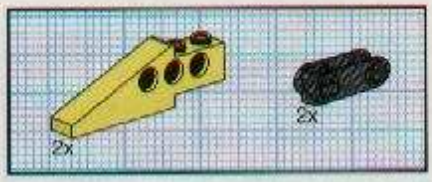

16

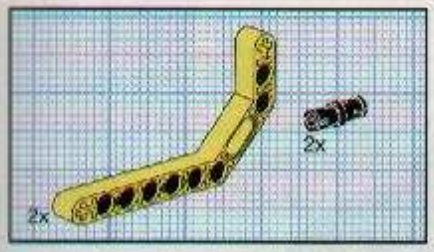

17

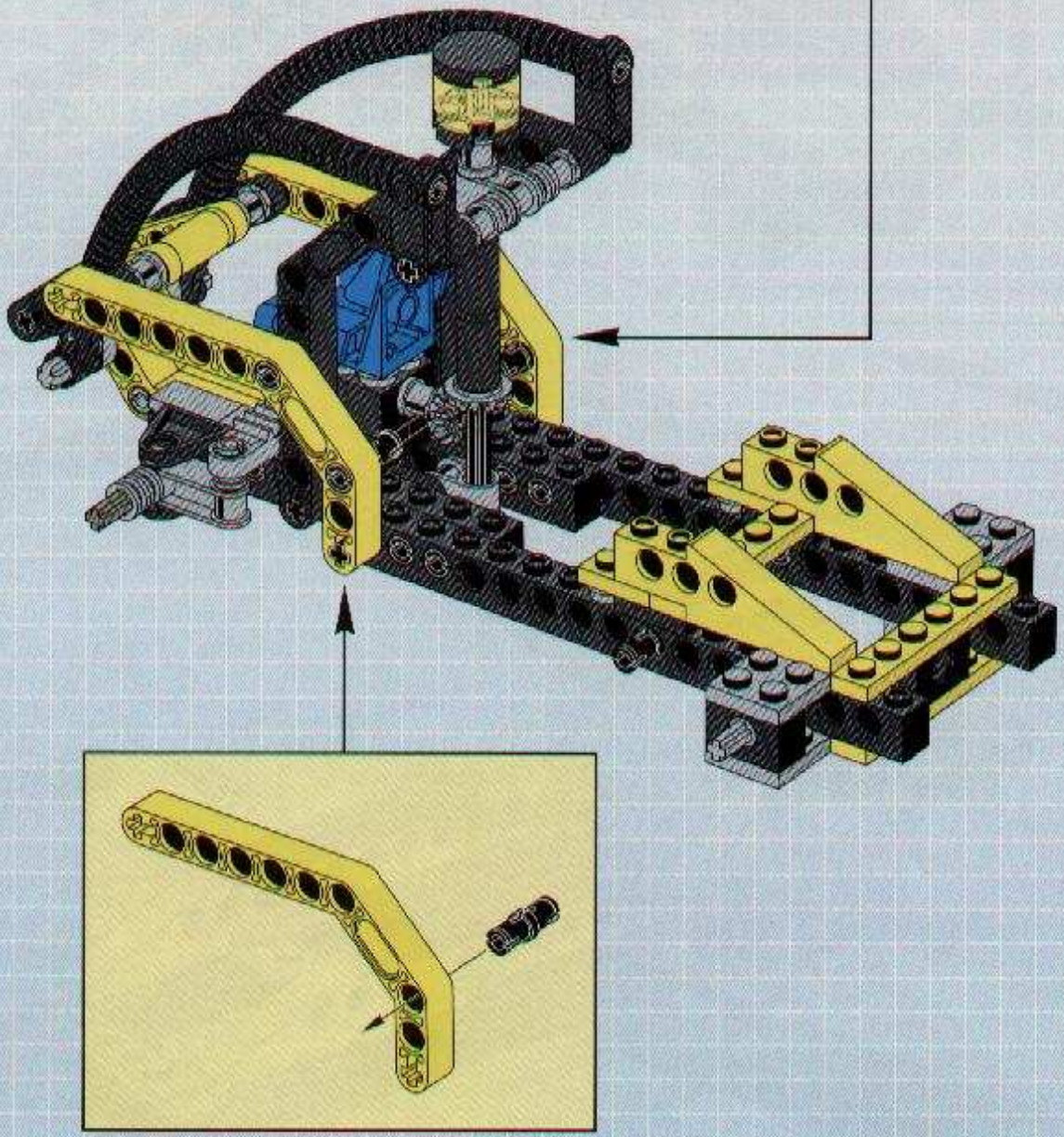

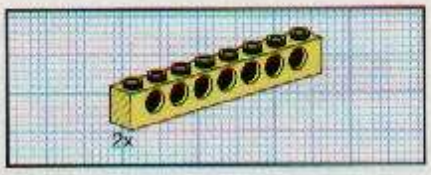

18

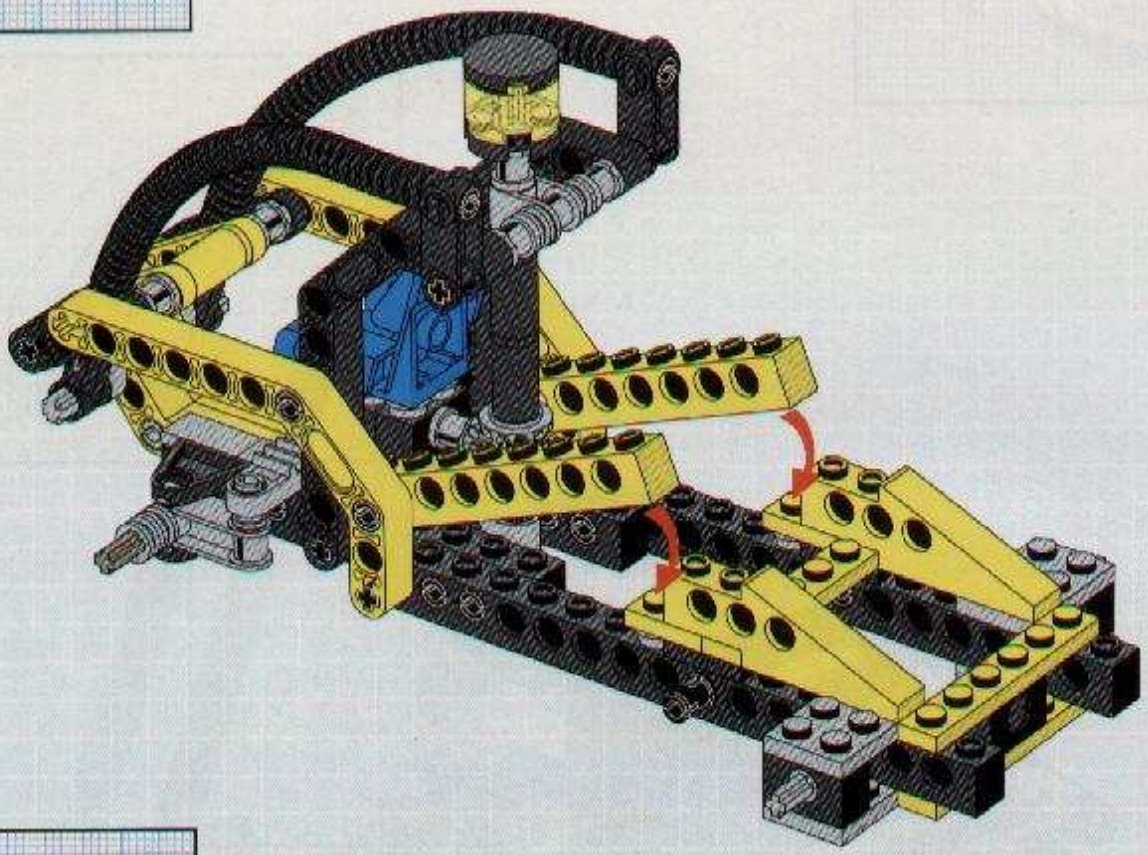

19

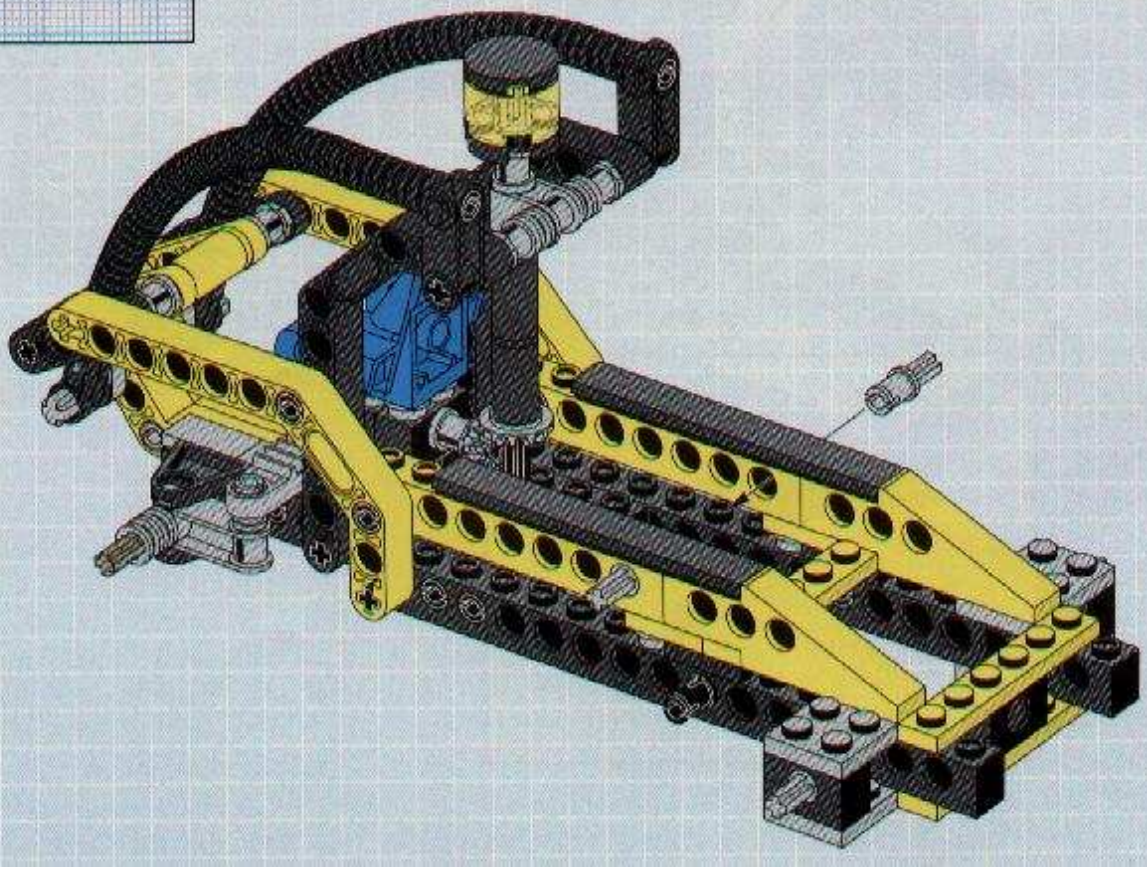

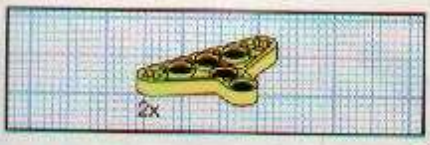

20

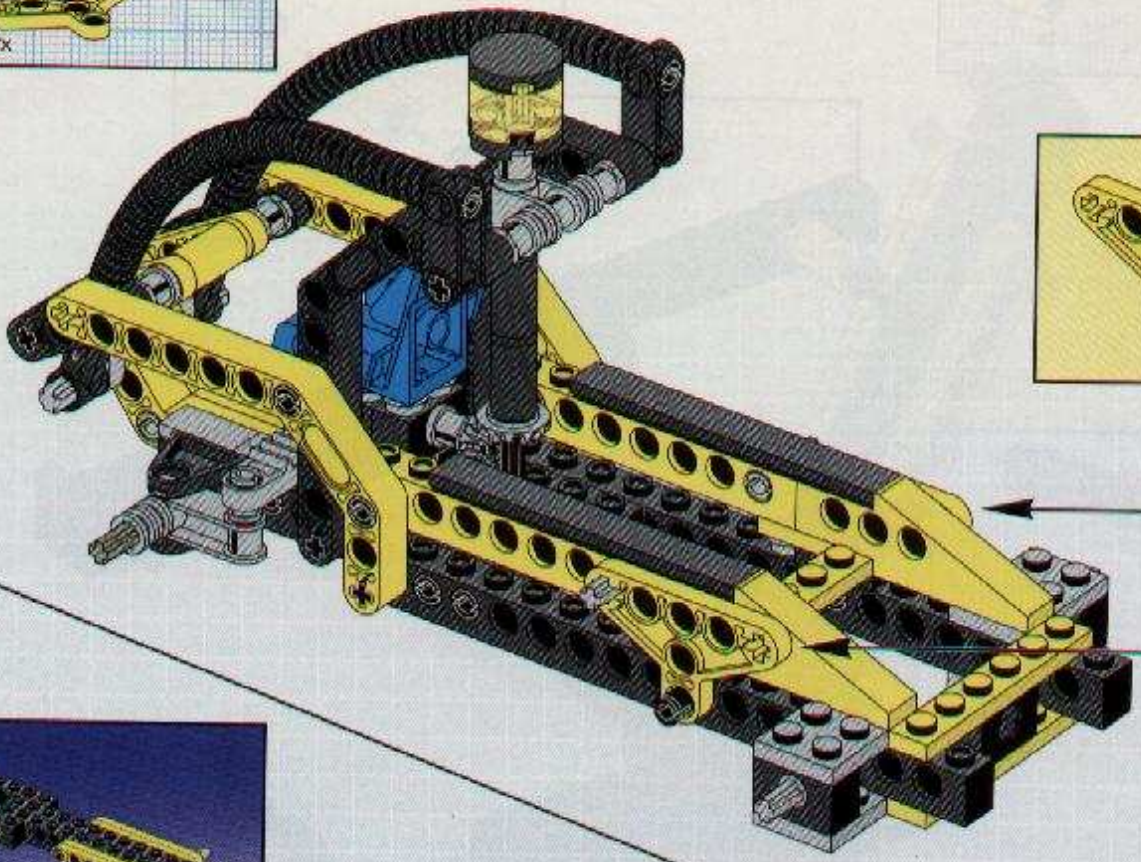

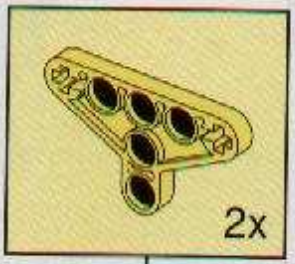

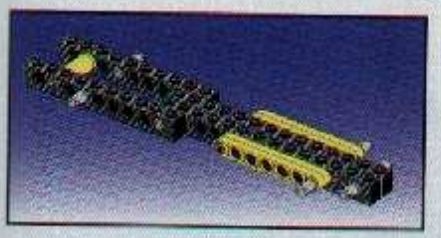

1

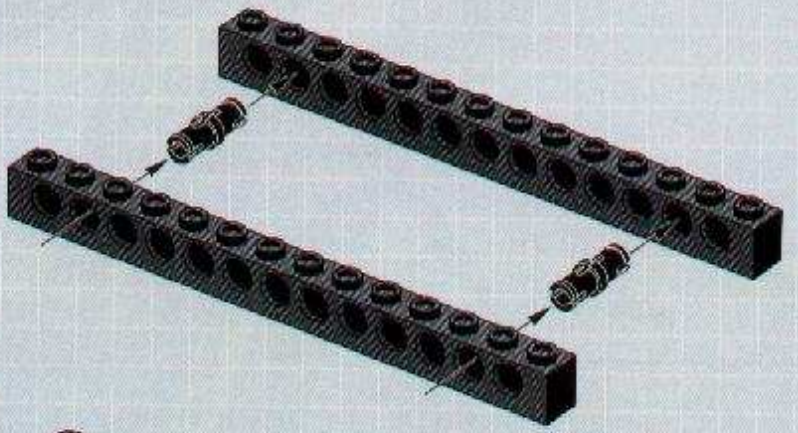

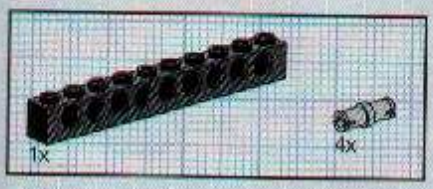

2

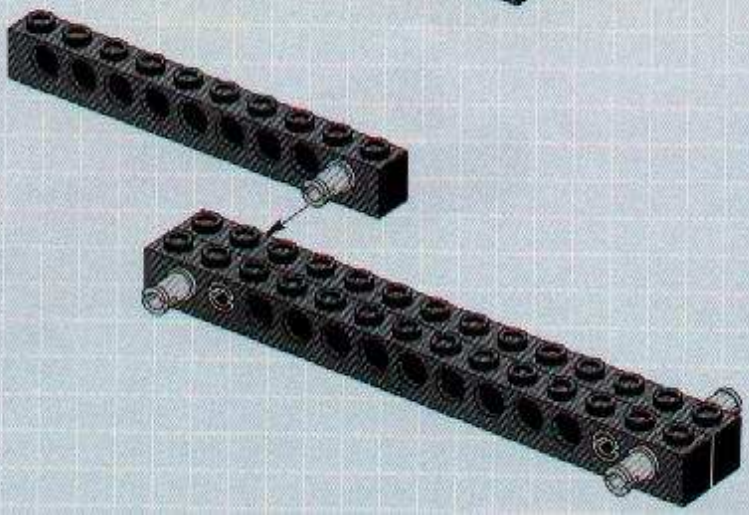

3

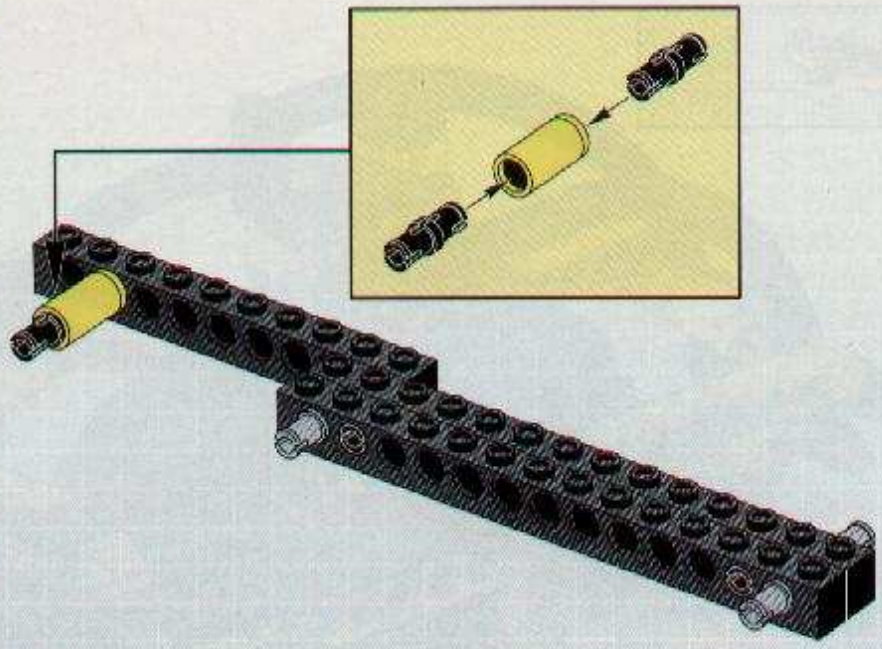

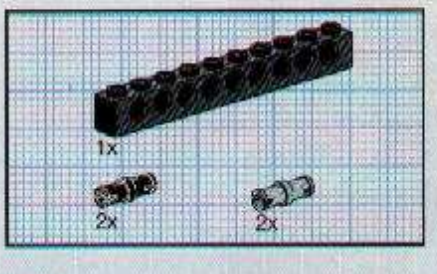

4

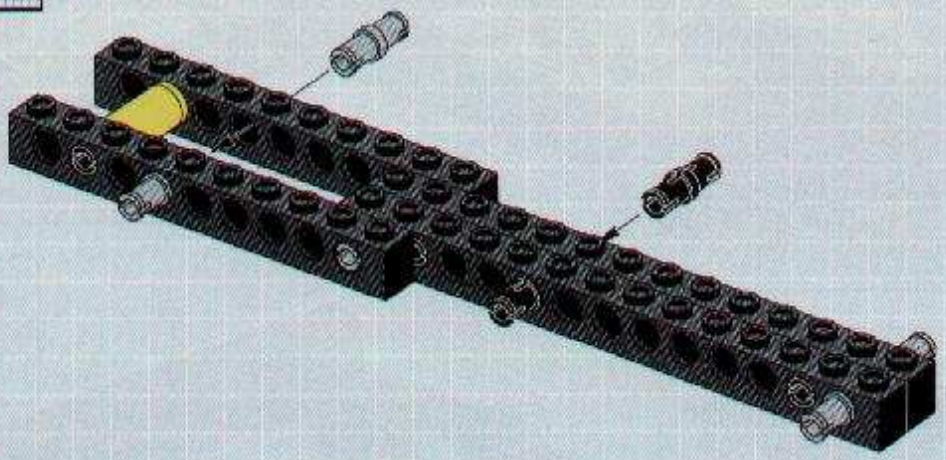

5

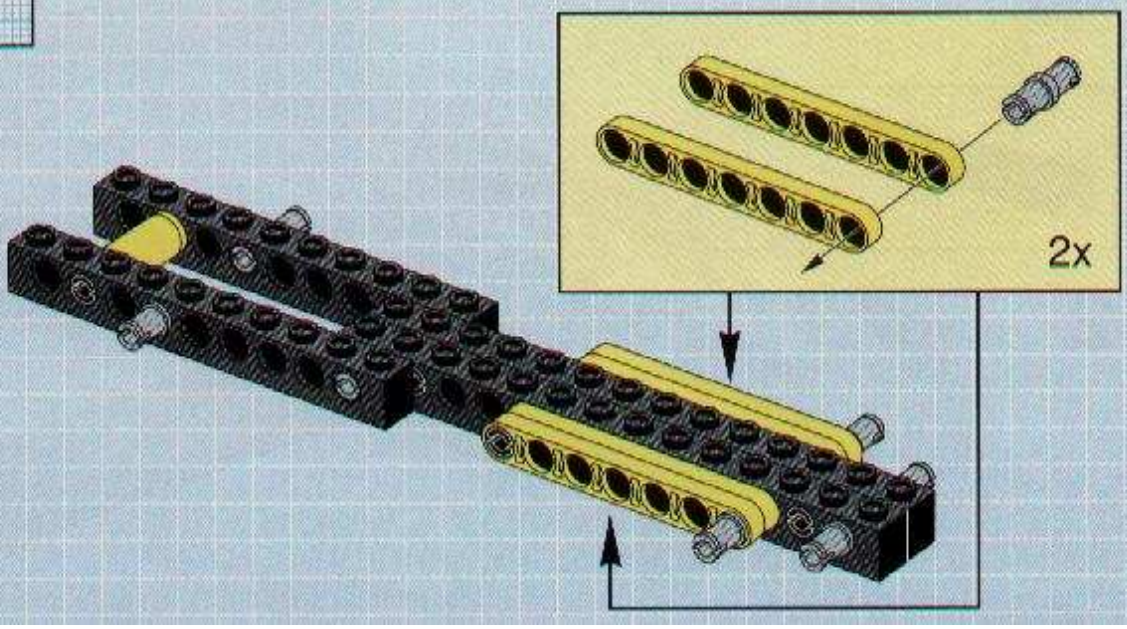

21

22

23

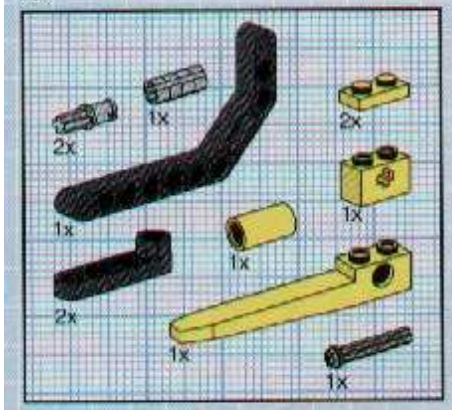

24

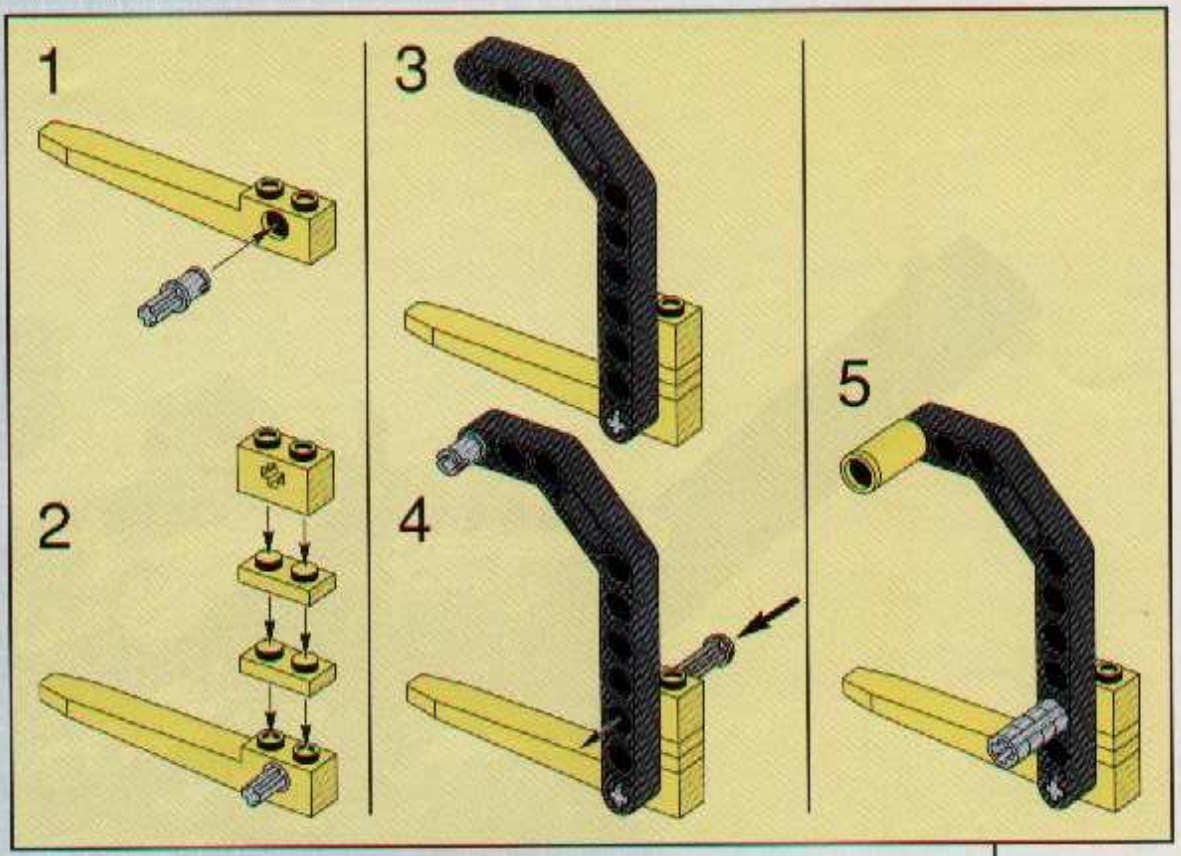

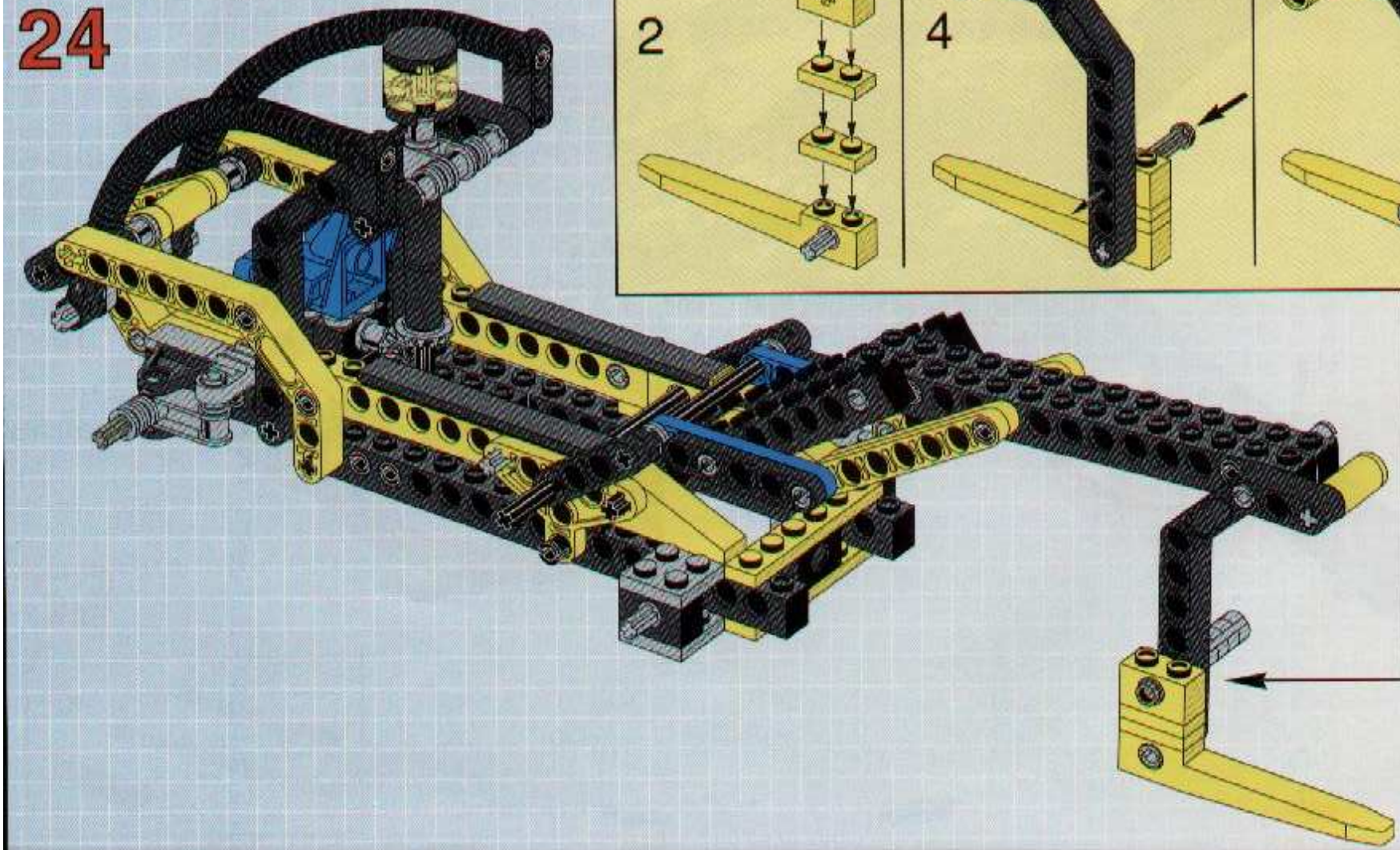

25

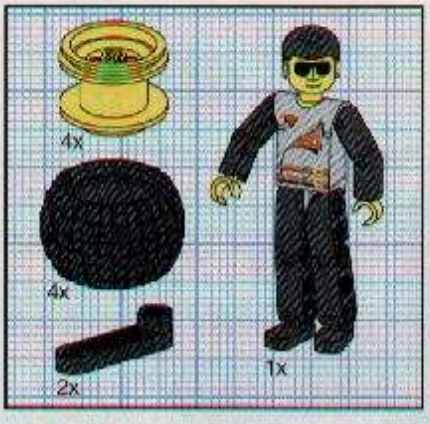

26

+

=

8248+8735

1

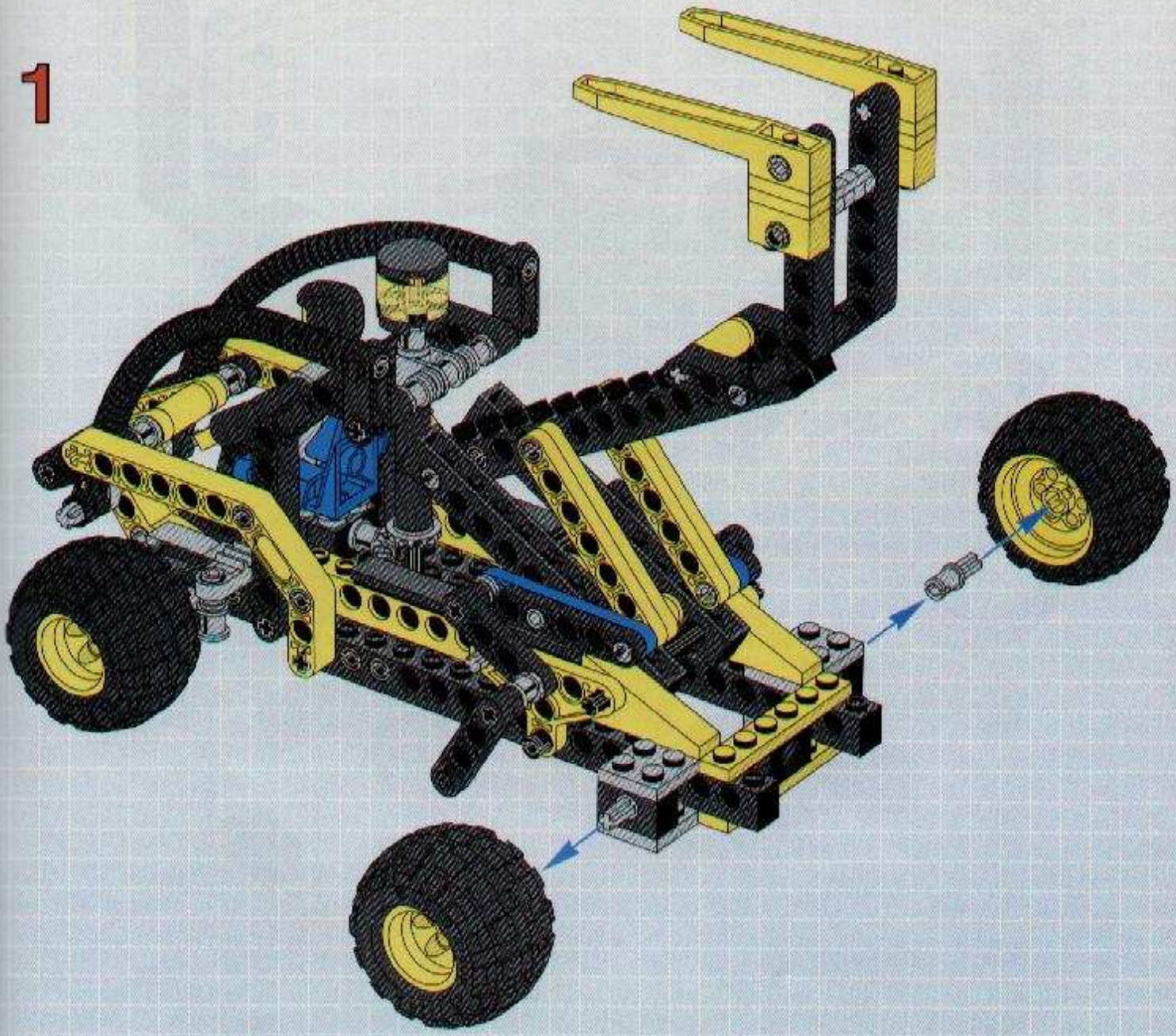

2

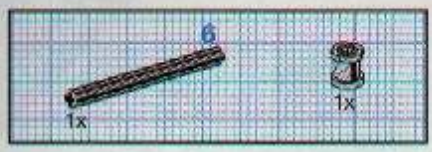

3

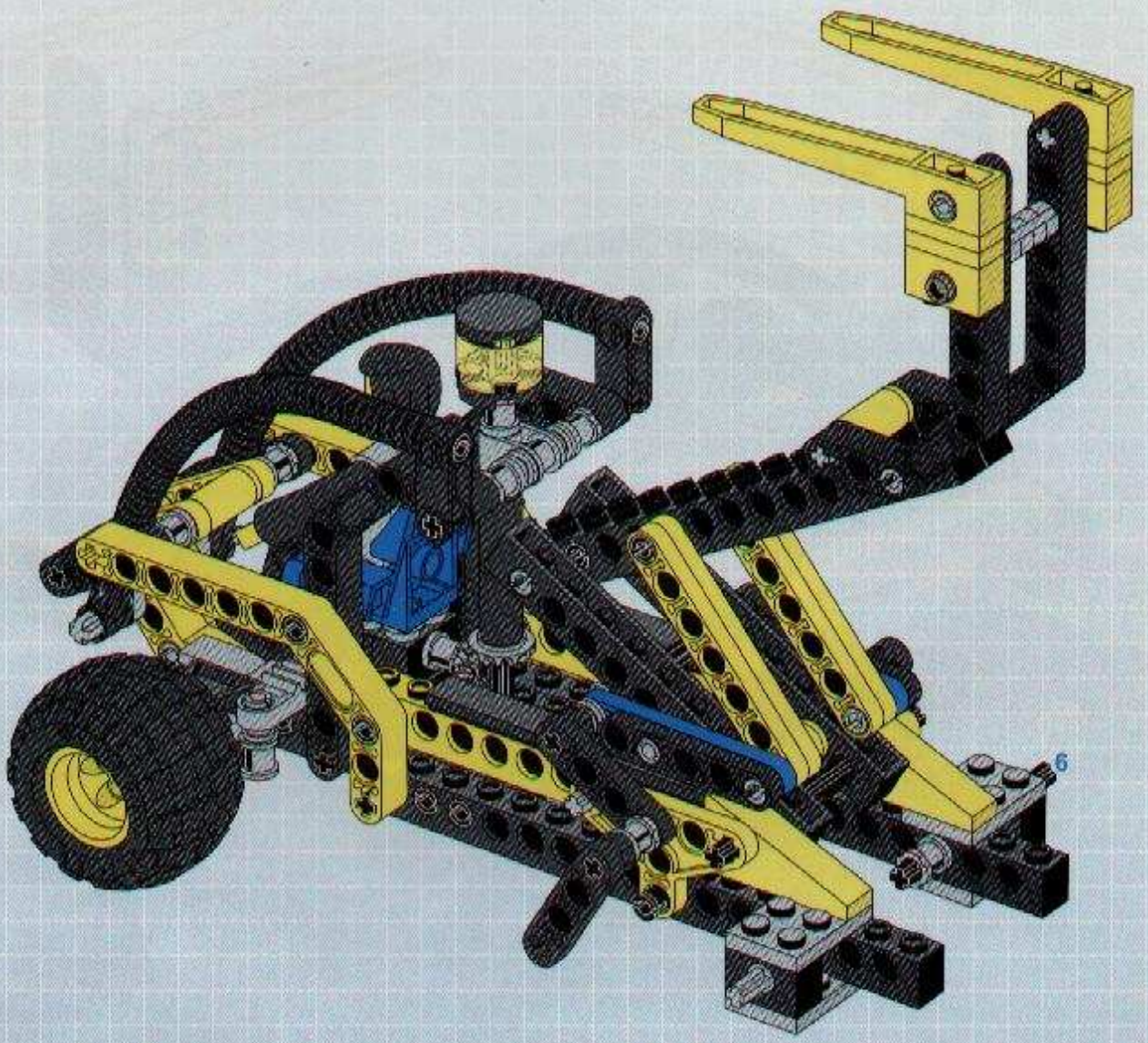

4

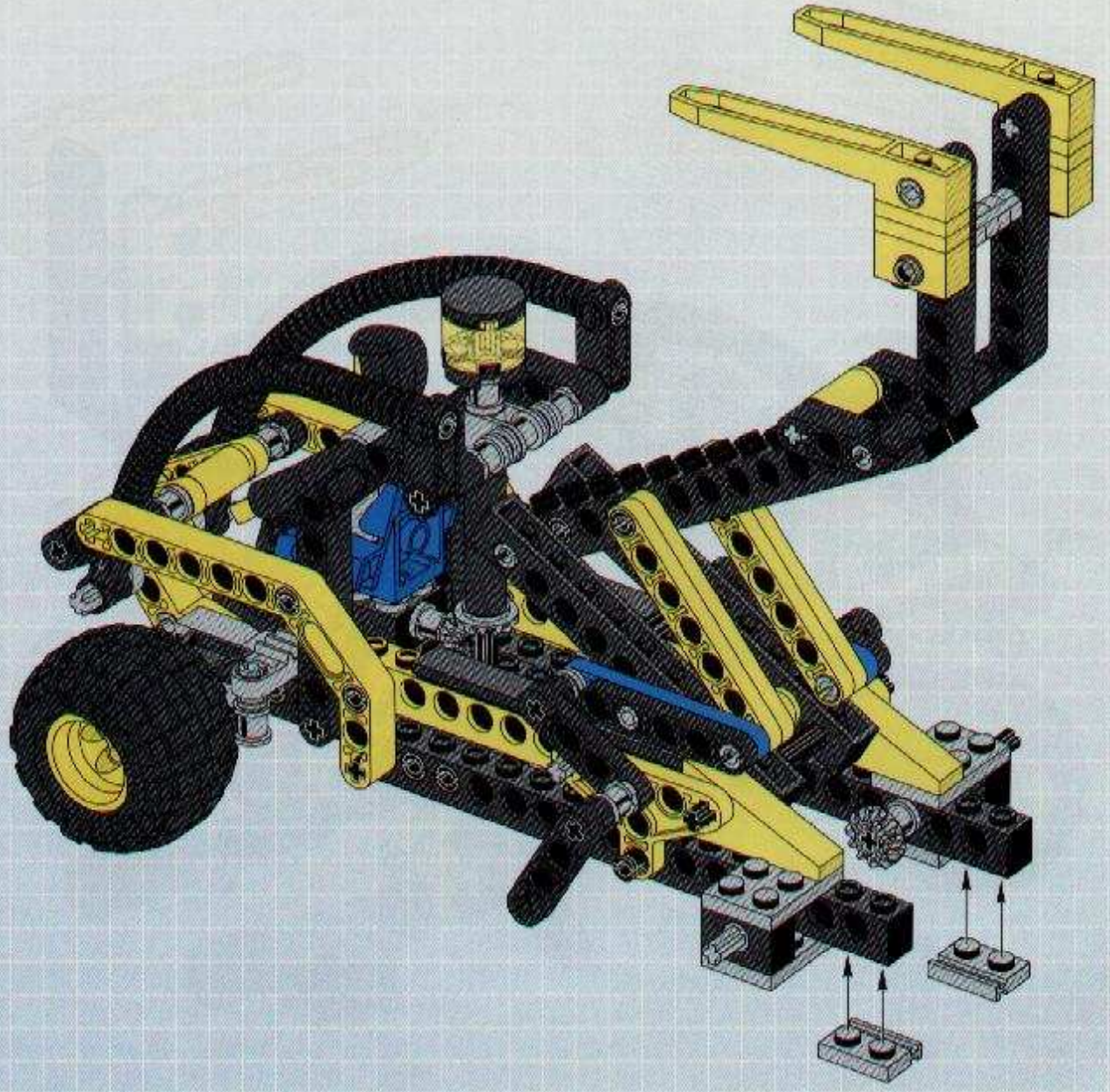

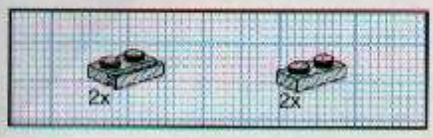

5

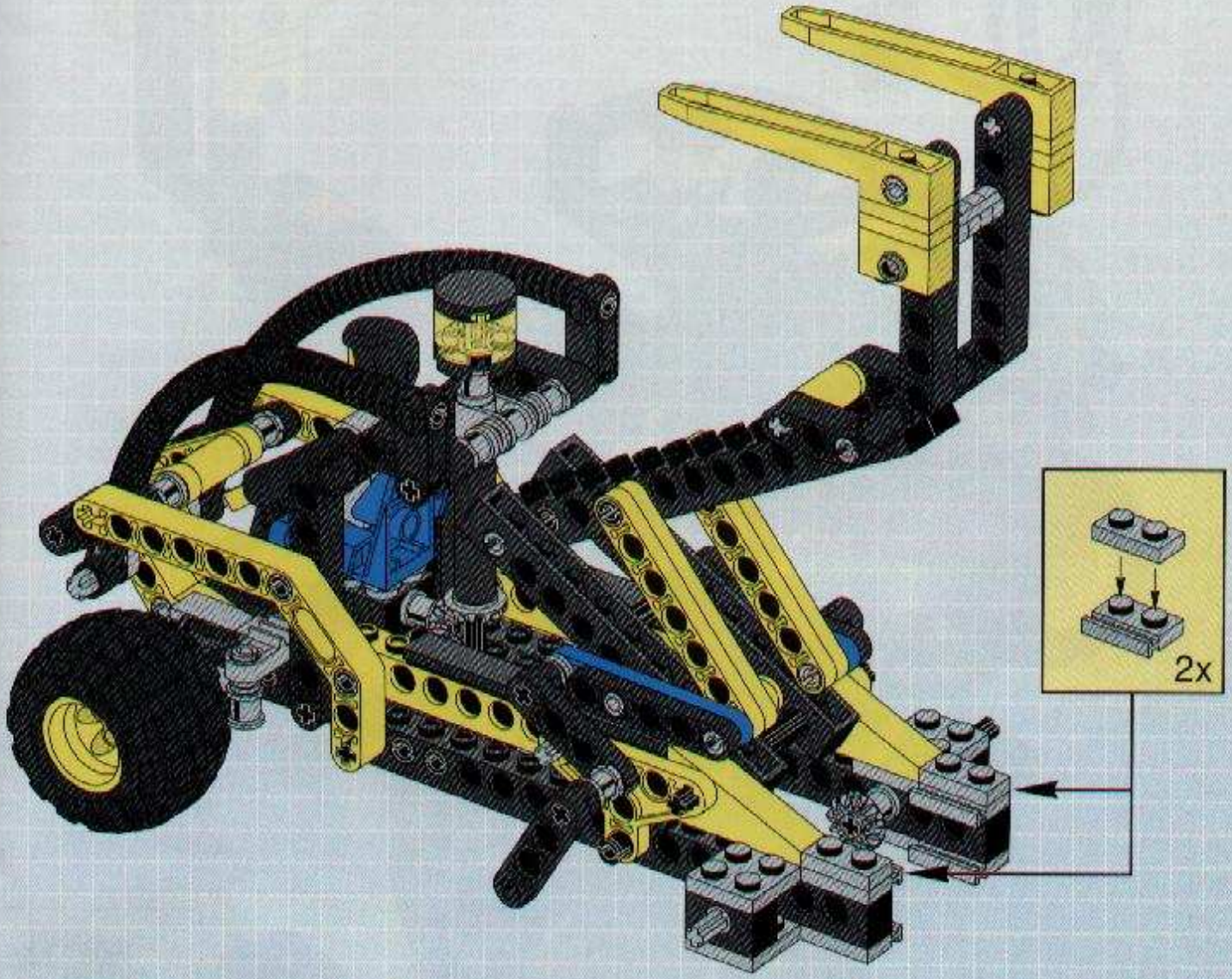

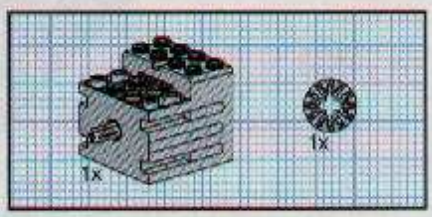

6

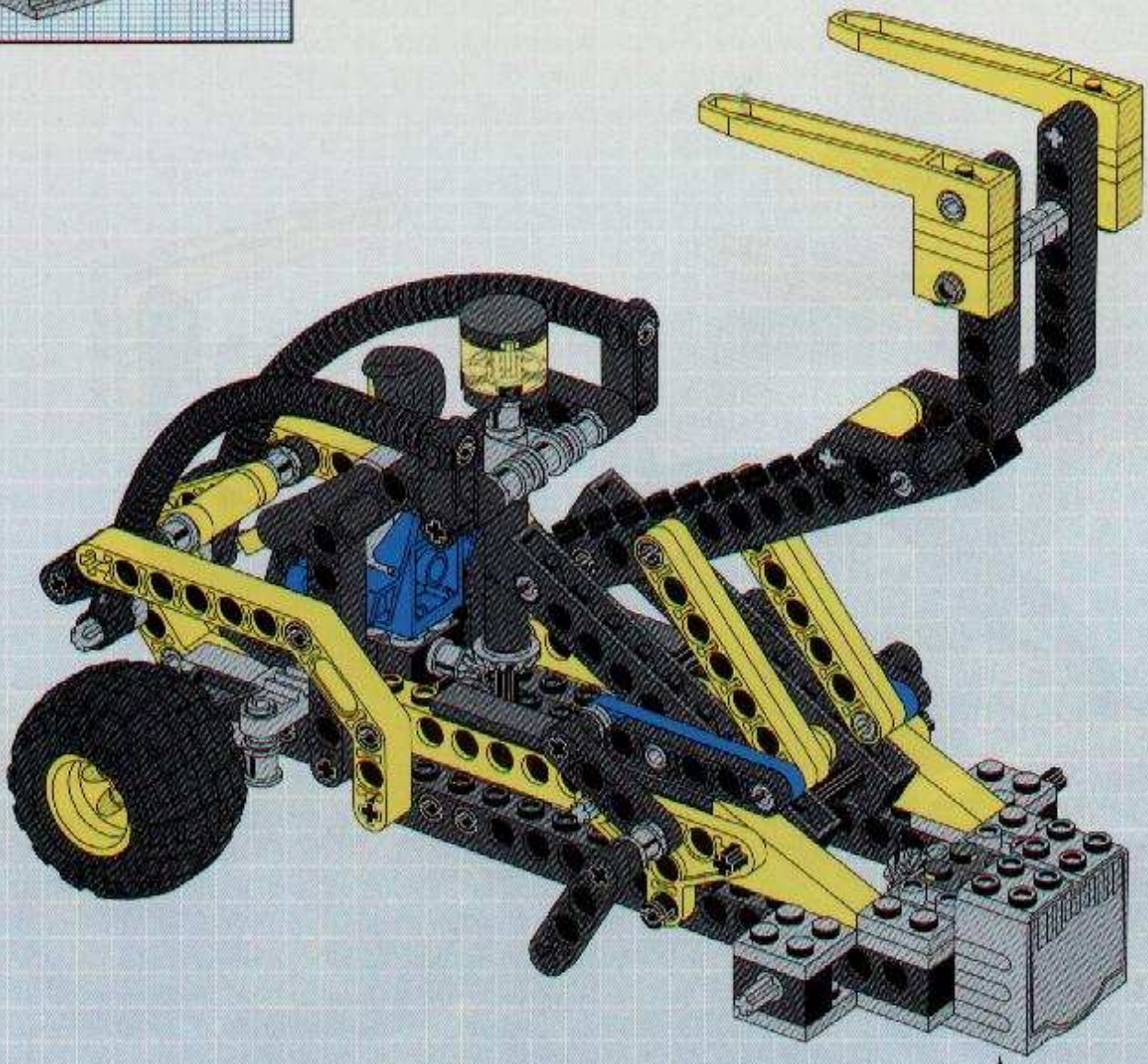

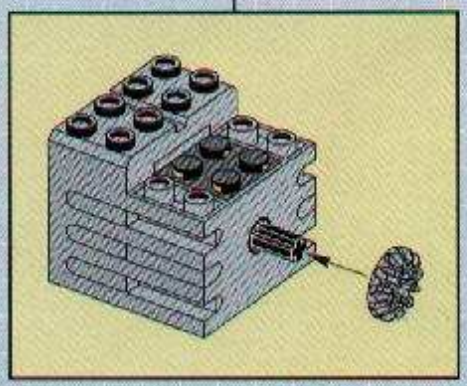

7

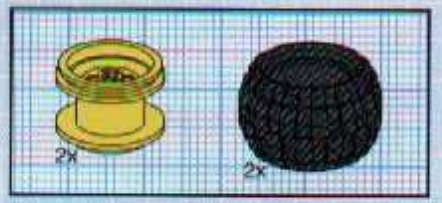

8

© 1998 LEGO group http://www.LEGO.com